COLOR TELEVISION RECEIVER

Chassis : K57A(N)
Model : CL29K5MQKX/XAP

SERVICE Manual

COLOR TELEVISION RECEIVER

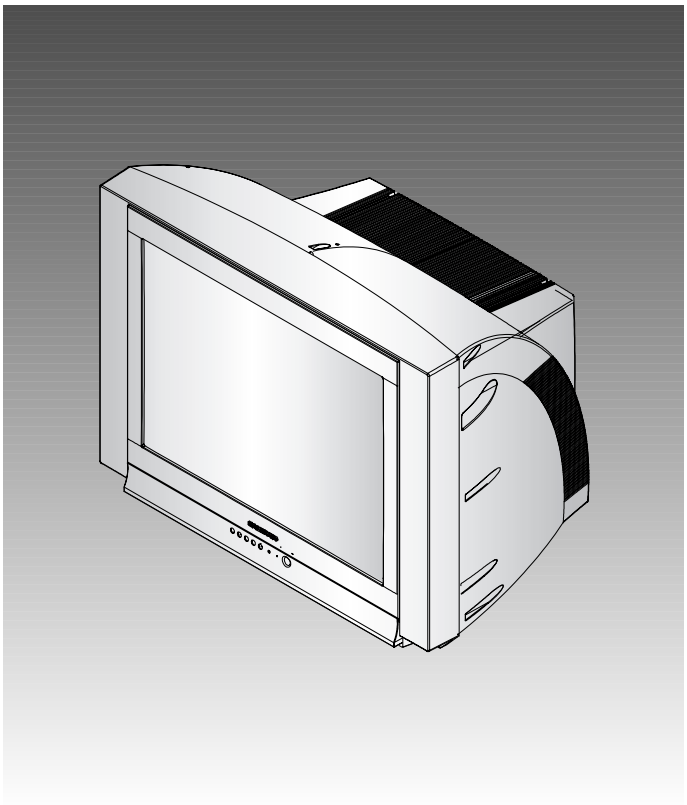

CONTENTS

1. Precautions
2. Specifications and IC Data
3. Disassembly and Reassembly
4. Alignment and Adjustment
5. Troubleshooting
6. Exploded View and Parts List
7. Electrical Parts List
8. Block Diagram
9. Wiring Diagram
10. Schematic Diagrams

SAMSUNG

ELECTRONICS

© Samsung Electronics Co., Ltd. **MAY . 2003**
Printed in Korea
AA82- 00622A

1. Precautions

Follow these safety, servicing and ESD precautions to prevent damage and protect against potential hazards such as electrical shock and X-rays.

1-1 Safety Precautions

1. Be sure that all of the built-in protective devices are replaced. Restore any missing protective shields.

2. When reinstalling the chassis and its assemblies, be sure to restore all protective devices, including: nonmetallic control knobs and compartment covers.

3. Make sure that there are no cabinet openings through which people—particularly children—might insert fingers and contact dangerous voltages. Such openings include the spacing between the picture tube and the cabinet mask, excessively wide cabinet ventilation slots, and improperly fitted back covers.

   If the measured resistance is less than 1.0 megohm or greater than 5.2 megohms, an abnormality exists that must be corrected before the unit is returned to the customer.

4. Leakage Current Hot Check (Figure 1-1):
   Warning: Do not use an isolation transformer during this test. Use a leakage-current tester or a metering system that complies with American National Standards Institute (ANIS C101.1, Leakage Current for Appliances), and Underwriters Laboratories (UL Publication UL1410, 59.7).

5. With the unit completely reassembled, plug the AC line cord directly into the power outlet. With the unit's AC switch first in the ON position and then OFF, measure the current between a known earth ground (metal water pipe, conduit, etc.) and all exposed metal parts, including: antennas, handle brackets, metal cabinets, screwheads and control shafts. The current measured should not exceed 0.5 milliamp. Reverse the power-plug prongs in the AC outlet and repeat the test.

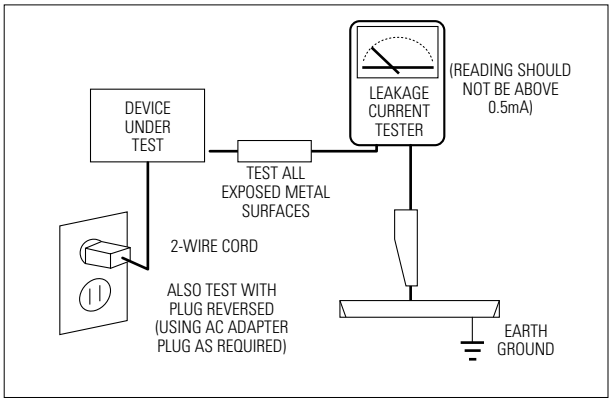

Fig. 1-1 AC Leakage Test

6. Antenna Cold Check:
   With the unit's AC plug disconnected from the AC source, connect an electrical jumper across the two AC prongs. Connect one lead of the ohmmeter to an AC prong. Connect the other lead to the coaxial connector.

7. X-ray Limits:
   The picture tube is especially designed to prohibit X-ray emissions. To ensure continued X-ray protection, replace the picture tube only with one that is the same type as the original. Carefully reinstall the picture tube shields and mounting hardware; these also provide X-ray protection.

8. High Voltage Limits:
   High voltage must be measured each time servicing is done on the B+, horizontal deflection or high voltage circuits. Correct operation of the X-ray protection circuits must be reconfirmed whenever they are serviced. (X-ray protection circuits also may be called "horizontal disable" or "hold-down".)

   Heed the high voltage limits. These include the X–ray Protection Specifications Label, and the Product Safety and X-ray Warning Note on the service data schematic.

1-1 Safety Precautions (Continued)

9. High voltage is maintained within specified limits by close-tolerance, safety-related components and adjustments. If the high voltage exceeds the specified limits, check each of the special components.

10. Design Alteration Warning:
Never alter or add to the mechanical or electrical design of this unit. Example: Do not add auxiliary audio or video connectors. Such alterations might create a safety hazard. Also, any design changes or additions will void the manufacturer's warranty.

11. Hot Chassis Warning:
Some TV receiver chassis are electrically connected directly to one conductor of the AC power cord. If an isolation transformer is not used, these units may be safely serviced only if the AC power plug is inserted so that the chassis is connected to the ground side of the AC source.

    To confirm that the AC power plug is inserted correctly, do the following: Using an AC voltmeter, measure the voltage between the chassis and a known earth ground. If the reading is greater than 1.0V, remove the AC power plug, reverse its polarity and reinsert. Re-measure the voltage between the chassis and ground.

12. Some TV chassis are designed to operate with 85 volts AC between chassis and ground, regardless of the AC plug polarity. These units can be safely serviced only if an isolation transformer inserted between the receiver and the power source.

13. Some TV chassis have a secondary ground system in addition to the main chassis ground. This secondary ground system is not isolated from the AC power line. The two ground systems are electrically separated by insulating material that must not be defeated or altered.

14. Components, parts and wiring that appear to have overheated or that are otherwise damaged should be replaced with parts that meet the original specifications. Always determine the cause of damage or overheating, and correct any potential hazards.

15. Observe the original lead dress, especially near the following areas: Antenna wiring, sharp edges, and especially the AC and high voltage power supplies. Always inspect for pinched, out-of-place, or frayed wiring. Do not change the spacing between components and the printed circuit board. Check the AC power cord for damage. Make sure that leads and components do not touch thermally hot parts.

16. Picture Tube Implosion Warning:
The picture tube in this receiver employs "integral implosion" protection. To ensure continued implosion protection, make sure that the replacement picture tube is the same as the original.

17. Do not remove, install or handle the picture tube without first putting on shatterproof goggles equipped with side shields. Never handle the picture tube by its neck. Some "in-line" picture tubes are equipped with a permanently attached deflection yoke; do not try to remove such "permanently attached" yokes from the picture tube.

18. Product Safety Notice:
Some electrical and mechanical parts have special safety-related characteristics which might not be obvious from visual inspection. These safety features and the protection they give might be lost if the replacement component differs from the original—even if the replacement is rated for higher voltage, wattage, etc.

    Components that are critical for safety are indicated in the circuit diagram by shading, (⚠) or (⚠).
    Use replacement components that have the same ratings, especially for flame resistance and dielectric strength specifications.
    A replacement part that does not have the same safety characteristics as the original might create shock, fire or other hazards.

1-2 Servicing Precautions

Warning1: First read the "Safety Precautions" section of this manual. If some unforeseen circumstance creates a conflict between the servicing and safety precautions, always follow the safety precautions.
Warning2: An electrolytic capacitor installed with the wrong polarity might explode.

1. Servicing precautions are printed on the cabinet. Follow them.

2. Always unplug the unit's AC power cord from the AC power source before attempting to: (a) Remove or reinstall any component or assembly, (b) Disconnect an electrical plug or connector, (c) Connect a test component in parallel with an electrolytic capacitor.

3. Some components are raised above the printed circuit board for safety. An insulation tube or tape is sometimes used. The internal wiring is sometimes clamped to prevent contact with thermally hot components. Reinstall all such elements to their original position.

4. After servicing, always check that the screws, components and wiring have been correctly reinstalled. Make sure that the portion around the serviced part has not been damaged.

5. Check the insulation between the blades of the AC plug and accessible conductive parts (examples: metal panels, input terminals and earphone jacks).

6. Insulation Checking Procedure: Disconnect the power cord from the AC source and turn the power switch ON. Connect an insulation resistance meter (500V) to the blades of the AC plug.

   The insulation resistance between each blade of the AC plug and accessible conductive parts (see above) should be greater than 1 megohm.

7. Never defeat any of the B+ voltage interlocks. Do not apply AC power to the unit (or any of its assemblies) unless all solid-state heat sinks are correctly installed.

8. Always connect a test instrument's ground lead to the instrument chassis ground before connecting the positive lead; always remove the instrument's ground lead last.

1-3 Precautions for Electrostatically Sensitive Devices (ESDs)

1. Some semiconductor ("solid state") devices are easily damaged by static electricity. Such components are called Electrostatically Sensitive Devices (ESDs); examples include integrated circuits and some field-effect transistors. The following techniques will reduce the occurrence of component damage caused by static electricity.

2. Immediately before handling any semicon ductor components or assemblies, drain the electrostatic charge from your body by touching a known earth ground. Alternatively, wear a discharging wrist-strap device. (Be sure to remove it prior to applying power—this is an electric shock precaution.)

3. After removing an ESD-equipped assembly, place it on a conductive surface such as aluminum foil to prevent accumulation of electrostatic charge.

4. Do not use freon-propelled chemicals. These can generate electrical charges that damage ESDs.

5. Use only a grounded-tip soldering iron when soldering or unsoldering ESDs.

6. Use only an anti-static solder removal device. Many solder removal devices are not rated as "anti-static"; these can accumulate sufficient electrical charge to damage ESDs.

7. Do not remove a replacement ESD from its protective package until you are ready to install it. Most replacement ESDs are packaged with leads that are electrically shorted together by conductive foam, aluminum foil or other conductive materials.

8. Immediately before removing the protective material from the leads of a replacement ESD, touch the protective material to the chassis or circuit assembly into which the device will be installed.

9. Minimize body motions when handling unpackaged replacement ESDs. Motions such as brushing clothes together, or lifting a foot from a carpeted floor can generate enough static electricity to damage an ESD.

CAUTION

These servicing instructions are for use by qualified service personnel only.
To reduce the risk of electric shock do not perform any servicing other than that contained in the operating instructions unless you are qualified to do so.

2. Specifications and IC Data

2-1 Specifications

Television System:

MODEL	SYSTEM
TXM2792FX	NTSC ONLY

Channels:

System / Band	NTSC
VHF	2 - 13
UHF	14 - 69
CABLE	1 - 125

Intermediate Frequencies (MHz) :

SYSTEM / IF Carrier Frequency	NTSC
Picture IF Carrier	45.75
Sound IF Carrier	41.25
Color Sub Carrier	42.18

Picture Tube:

29 Inch A68QCP891X100	29Inch Flat, +380MG

Power Requirements: AC 120V, 60Hz

Antenna Input Impedance: VHF, UHF : Telescopic dipole antenna (75 ohm unbalanced type)

Speaker Impedance 8 ohm, 15W+15W (Dual Type)

2-2 IC Line Up

Table 2-1 IC Line-Up			
Loc. No	Specification	Description	Remark
IC201S	SPM-464A	TDA9592 PS/NI, SPM-464A,64P	Philips
IC301	LA7845	VERTICAL OUTPUT	Sanyo
IC501	TDA6108QJF	RGB DRIVE AMP	Philips
IC602	TDA7297	SOUND-AMP (15W x 2CH)	Philips
IC801S	KA5Q1265R	POWER IC (STR)	FIAIR CHILD
IC802	KA7632	CUSTOM REGULATOR (5V, 8V, 3.3V)	FIAIR CHILD
IC202	M24C08	EEPROM	
PC801S PC802S	TCET1108 / LTV817B	PHOTO COUPLER	
IC101	LA7510	IF DETECTOR-IC	TEMIC
IC601	MSP-3425G-B8	Sound Processor	Micronas
ICP01	VIPER12AD1P	PWM CONTROCER-IC	
ICW01	NJM2235D	VIDEO Swiching-IC	
ICG01	4558	OP AMP-IC	

2-3 Semiconductor Base Diagrams

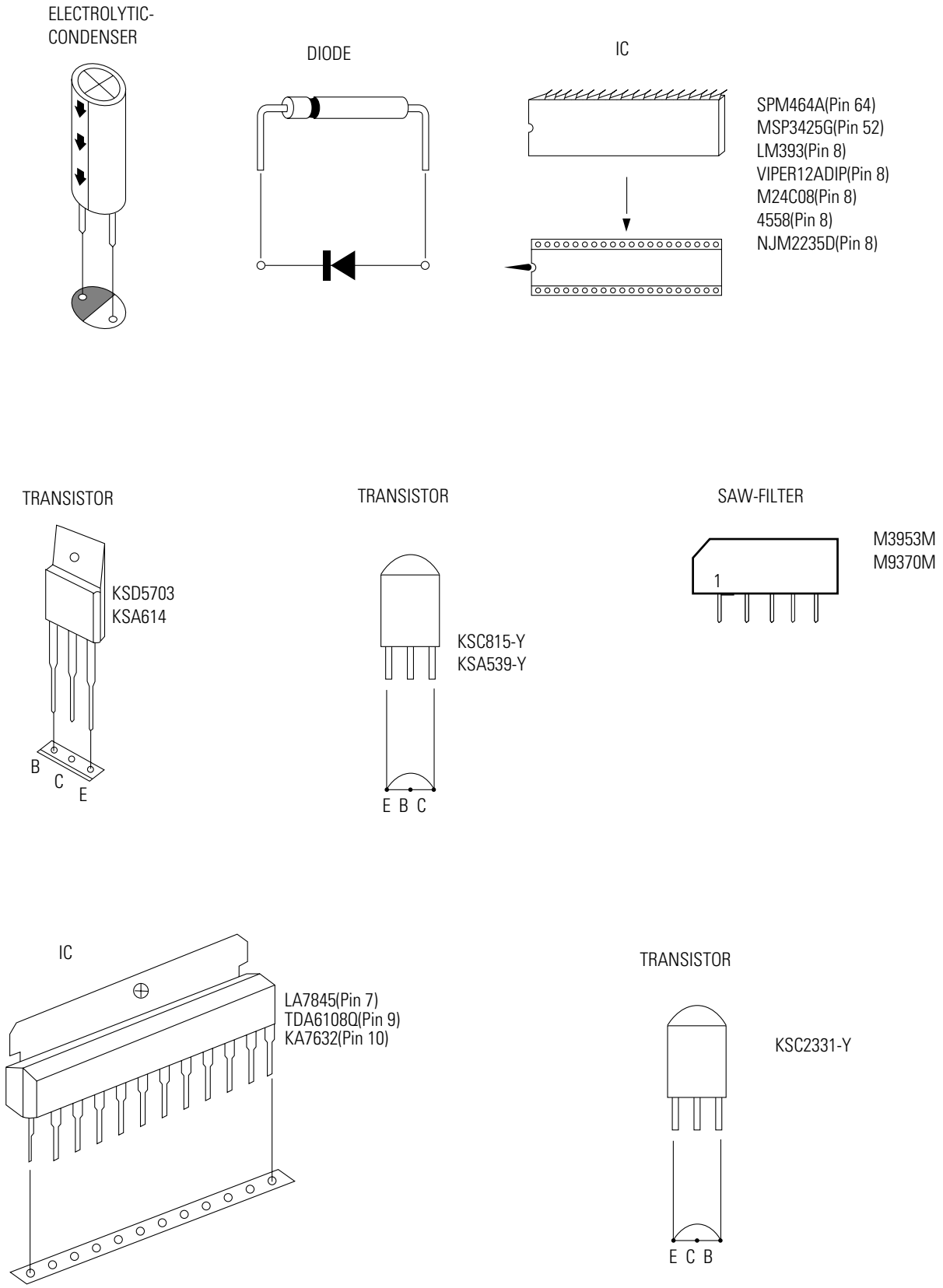

Fig. 2-1 Semiconductor Base Diagrams

MEMO

3. Disassembly and Reassembly

3-1 Back Cover Removal

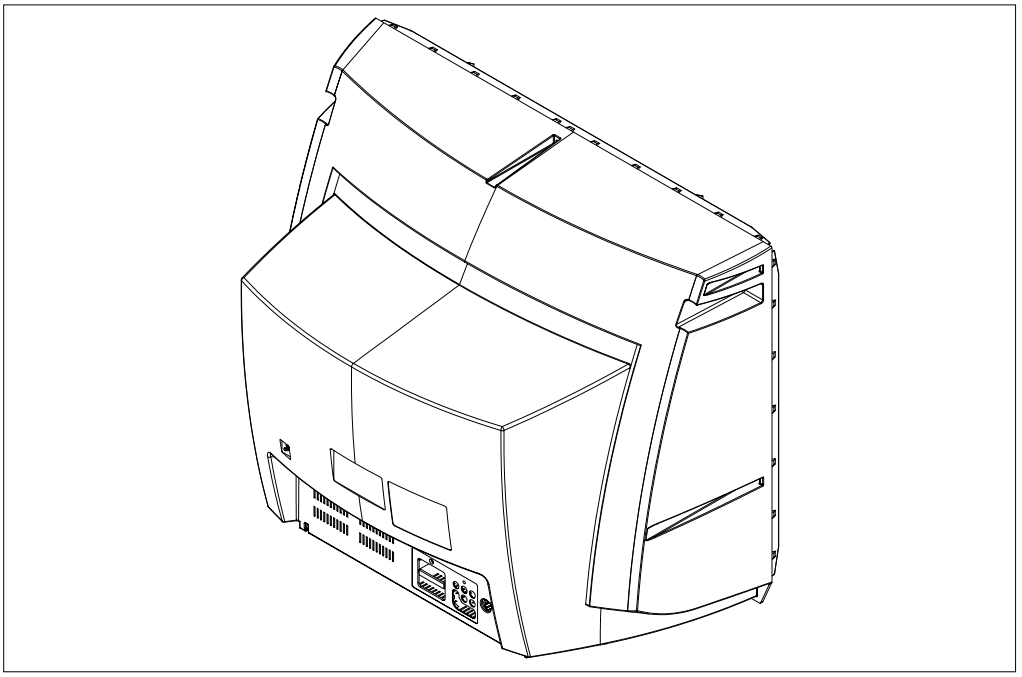

1. After removing the screws, press the tension rib and pull the cabinet backwards.
2. To reassemble, press the tension rib (see diagram).

3-2 Main Board Removal

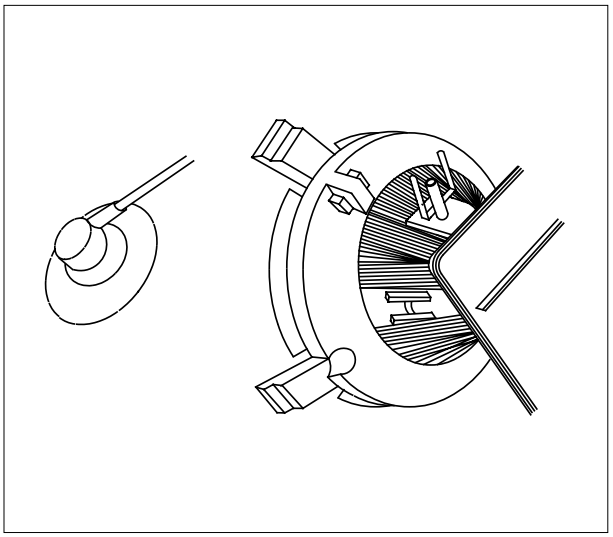

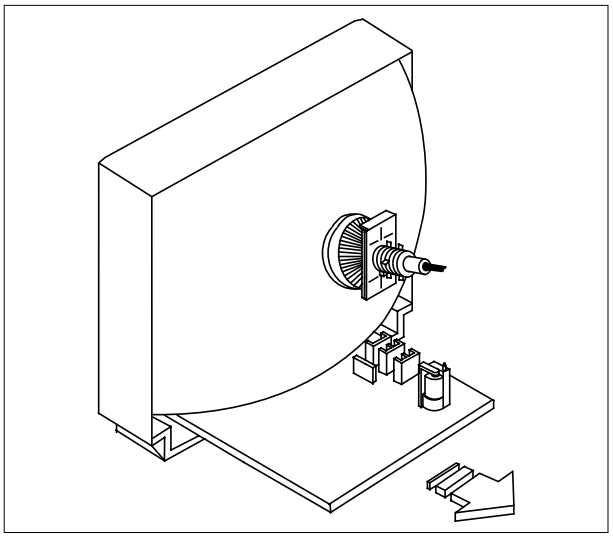

1. Separate the socket board from the CRT neck.
2. Remove the Anode Cap from the CRT.
3. Remove the main board by pulling it with both hands.

Warning: The FBT is charged with high voltage.
Before removing the Anode Cap, discharge the voltage through one of the heat sinks on the main board.

3-3 Speaker Removal

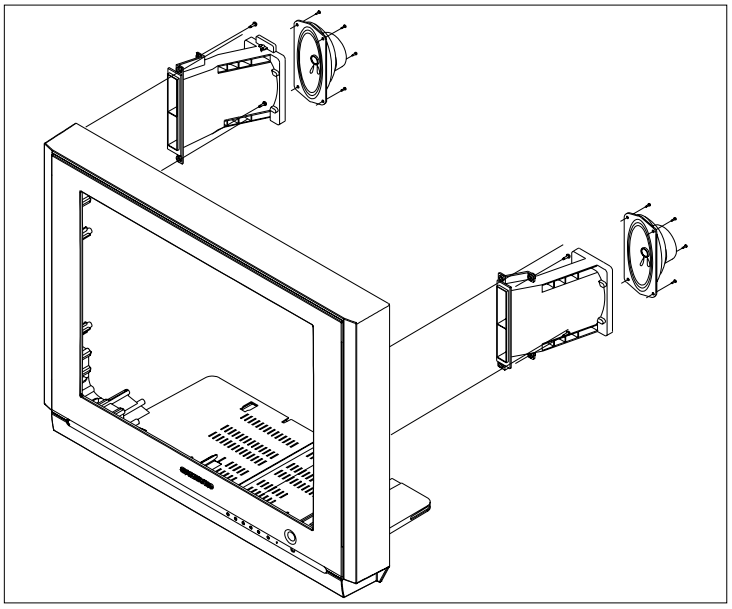

1. Remove the speaker by pressing the tension rib.

3-4 CRT Removal

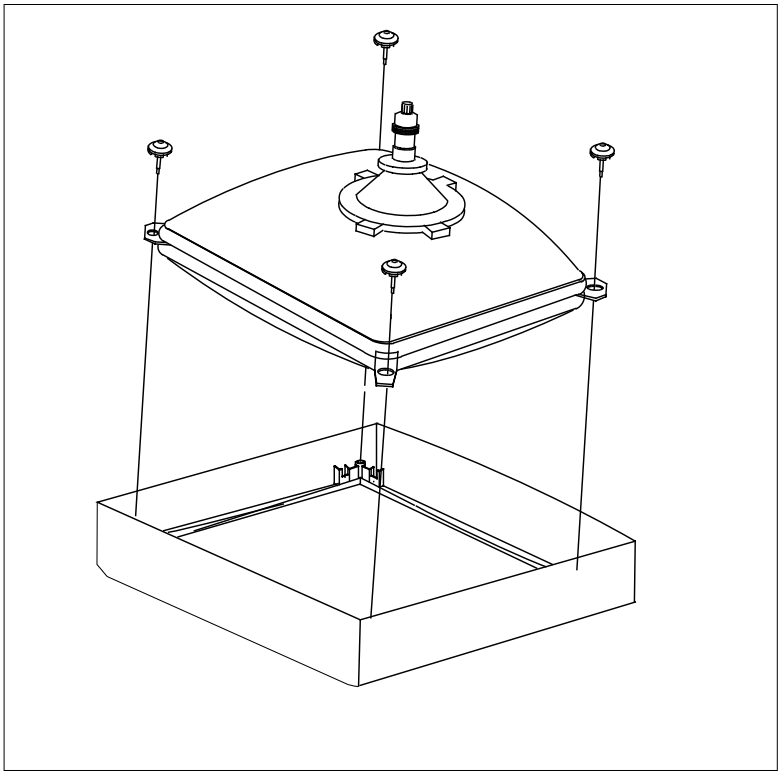

1. Spread a soft mat on the floor. Place the TV set face down.

2. Remove the 4 nuts mounting the CRT to the front cabinet. Lift the CRT.

3. Caution: Because of the high vacuum and large surface area of the picture tube, be careful while handling it: (1) Always lift the picture tube by grasping it firmly around the faceplate, (2) Never lift the tube by its neck. (3) Do not scratch the picture tube or apply excessive pressure. Fractures of the glass may cause an implosion.

MEMO

4. Alignment and Adjustments

4-1 Preadjustment

4-1-1 Factory Mode

1. Do not attempt these adjustments in the Video Mode.

2. The Factory Mode adjustments are necessary when either the EEPROM (IC202) or the CRT is replaced.

3. Do not tamper with the “Adjustment” screen of the Factory Mode menu. This screen is intended only for factory use.

4-1-2 When EEPROM (IC202) Is Replaced

1. When IC202 is replaced all adjustment data revert to initial values. It is necessary to re-program this data.

2. After IC202 is replaced, warm up the TV for 10 seconds.

4-1-3 When CRT Is Replaced

1. Make the following adjustments AFTER setting up after setting up purity and convergence :

   White Balance
   Sub-Brightness
   Vertical Center
   Vertical Size
   Horizontal Size
   Fail Safe (This adjustment must be the last step).

2. If the EEPROM or CRT is replaced and set SC as 30(factory mode).

4-2 Factory/Service Mode

4-2-1 Procedure for the “Adjustment” Mode

1. This mode uses the standard remote control. The Service Mode is activated by entering the following remote-control sequence :

   (1) DISPLAY → FACTORY.

   (2) STAND-BY → MUTE → 1 → 8 → 2 →POWER ON.

2. The “SERVICE (FACTORY)” message will be displayed. The Service Mode has four components: ADJUST, OPTION , G2-ADJUST and RESET.

3. Access the Adjustment Mode by pressing the “VOLUME” keys (Up or Down). The adjustment parameters are listed in the accompanying table, and selected by pressing the CHANNEL keys (▲,▼).

4. Selection sequences for the all system:

   DOWN or UP key:

   SCT>SBT>BLR>BLB>RG>GG>BG>VSL>VS>
   VA>HS>SC>CDL>STT>AKB>NDL>NSR>
   SCBT>VOL>CAP>MVOL>RP00>RP01>
   AGCS>OMD>SCL>PWL>MUS>AGC>
   HPAR>HBOW>EWID>EPAR>EUCN>ELCN>
   ETRP>VZ>SVM>VMA>SSP>PSNS>
   DNSR>DSBT>DCDL>DBLR>DBLB>DSK

5. The VOLUME keys increase or decrease the adjustment values (stored in the non-volatile memory) when Adjustment Mode is cancelled.

6. Cancel the Adjustment Mode by re-pressing the “FACTORY” or “Power OFF” keys.

4-2-2 Main Adjustment Parameter

NO	OSD	FUNCTION	RANGE	INITIAL DATA	SELECTION	REMARK
1	SCT	Sub Contrast	0 ~ 23	13		ADJ
2	SBT	Sub Brightness	0 ~ 23	9		ADJ
3	BLR	Black Level offset R	0 ~ 63	32		ADJ
4	BLB	Black Level offset B	0 ~ 63	32		ADJ
5	RG	Red Gain	0 ~ 63	28		ADJ
6	GG	Green Gain	0 ~ 63	25		FIX
7	BG	Blue Gain	0 ~ 63	31		ADJ
8	VSL	Vertical Slope	0 ~ 63	27		ADJ
9	VS	Vertical Shift	0 ~ 63	31		FIX
10	VA	Vertical Amplitude	0 ~ 63	32		ADJ
11	HS	Horizontal Shift	0 ~ 63	30		ADJ
12	SC	S-Correction	0 ~ 63	29		FIX
13	CDL	Cathode Drive Level	0 ~ 15	11		FIX
14	STT	Sub Tint	0 ~ 7	5		FIX
15	AKB	AKB On / off	0 ~ 1	0		FIX
16	NDL	NTSC Delay	0 ~ 15	1		FIX
17	NSR	NTSC Sub color	0 ~ 23	5		FIX
18	SCBT	Screen Brighrtness	0 ~ 63	36		FIX
19	VOL	Volume pre setting	0 ~ 63	10		FIX
20	CAP	Caption Position	0 ~ 15	12		FIX
21	MVOL	Melody Volume	0 ~ 50	7		FIX
22	RP00	Ratio Pre / overshoot	0 ~ 1	1		FIX
23	RP01	Ratio Pre / overshoot	0 ~ 1	1		FIX
24	AGCS	IF AGC Speed	0 ~ 3	1		FIX
25	OMD	Offset IF Demodulator	0 ~ 63	15		FIX
26	SCL	Soft Clipping Level	0 ~ 3	3		FIX
27	PWL	Peak White Limitting	0 ~ 15	15		FIX
28	MUS	Color Matrix	0 ~ 1	1		FIX
29	AGC	Automatic Gain Control	0 ~ 63	33		FIX
30	HPAR	Horizontal Parallelogram	0 ~ 63	32		ADJ
31	HBOW	Horizontal Bow	0 ~ 63	32		ADJ
32	EWID	EW Width	0 ~ 63	32		ADJ

NO	OSD	FUNCTION	RANGE	INITIAL DATA	SELECTION	REMARK
33	EPAR	EW Parabola	0 ~ 63	32		ADJ
34	EUCN	EW Upper Coner	0 ~ 63	12		ADJ
35	ELCN	EW Lower Coner	0 ~ 63	12		ADJ
36	ETRP	EW Trapezium	0 ~ 63	12		ADJ
37	VZ	Vertical Zoom	0 ~ 63	48		FIX
38	SVM	Delay of RGB to VM Output	0 ~ 3	0		FIX
39	VMA	Amplitude of SVM Output	0 ~ 3	3		FIX
40	SSP	Sub Sharpness	0 ~ 20	5		FIX
41	PSNS	Identification sens	0 ~ 1	1		FIX
42	DNSR	NSR in DVD mode	0 ~ 23	5		FIX
43	DSBT	SBT in DVD mode	0 ~ 23	4		FIX
44	DCDL	CDL in DVD mode	0 ~ 16	10		FIX
45	DBLR	BLR in DVD mode	0 ~ 63	32		FIX
46	DBLB	BLB in DVD mode	0 ~ 63	32		FIX
47	DSK	Dynamic Skin Tone Control	0 ~ 1	0		FIX

4-2-3 Option Bytes

In the Service Mode, various can be selected via the Option Table. Example:

Option Table : xx xx

	OSD	SETTING	REMARK
1	SYSTEM	CT-N EN/SP/FR	- Language
2	VIDEO MUTE	OFF	- Video Mute On/Off changing the channel
3	ZOOM	NOR/ZOOM	- Picture Size Option
4	AUTO POWER	OFF	- Master S/w Option
5	AUDIO MUTE	ON	- Audio Mute On/ Off without signal
6	START LANG.	ENGLISH	- Inital Language agter Factory Reset
7	HOTEL MODE	OFF	- Hotel mode On/ Off
8	BULE SCREEN	OFF	- Bule Screen On/ Off without signal
9	V-CHIP	ON	- V-CHIP ON/OFF (U.S.A)
10	AV OPTION	AV1/AV2/S-V/DVD	- AV + S-V + DVD
11	TILT	ON	- TILT ON/OFF
12	DEMO	OFF	- DEMO ON/OFF
13	EXT COMB	OFF	- External 2H-COM ON/OFF
14	V-Guard	ON	- Vertical Guard ON/OFF (*MAIN PCB A LOT : OFF)

4-2-4 RESET

The Reset Mode is used during factory inspection.
Function Reset:

1.	Picture Mode	Dynamic
2.	Sound Mode	Custom
3.	Auto Volume	Off
4.	Melody	On
5.	Surround	Off
6.	Turbo Sound	Off
7.	MTS	Stereo
8.	Language	English
9.	Caption	Off
10.	Timer	Off

4-3 Other Adjustments

4-3-1 General

1. Usually, a color TV needs only slight touch-up adjustment upon installation. Check the basic characteristics such as height, horizontal and vertical sync and focus.

2. The picture should have good black and white details. There should be no objectionable color shading; if color shading is present, perform the purity and convergence adjustments described below.

3. Use the specified test equipment or its equivalent.

4. Correct impedance matching is essential.

5. Avoid overload. Excessive signal from a sweep generator might overload the front-end of the TV. When inserting signal markers, do not allow the marker generator to distort test results.

6. Connect the TV only to an AC power source with voltage and frequency as specified on the backcover nameplate.

7. Do not attempt to connect or disconnect any wires while the TV is turned on. Make sure that the power cord is disconnected before replacing any parts.

8. To protect against shock hazard, use an isolation transformer.

4-3-2 Automatic Degaussing

A degaussing coil is mounted around the picture tube, so that external degaussing after moving the TV should be unnecessary. But the receiver must be properly degaussed upon installation.

The degaussing coil operates for about 1 second after the power is switched ON. If the set has been moved or turned in a different direction, disconnect its AC power for at least 30 minutes.

If the chassis or parts of the cabinet become magnetized, poor color purity will result. If this happens, use an external degaussing coil. Slowly move the degaussing coil around the faceplate of the picture tube and the sides and front of the receiver. Slowly withdraw the coil to a distance of about 6 feet before removing power.

4-3-3 High Voltage Check

CAUTION: There is no high voltage adjustment on this chassis. The B+ power supply must be set to +130 volts (Full color bar input and normal picture level).

1. Connect a digital voltmeter to the second anode of the picture tube.
2. Turn on the TV. Set the Brightness and Contrast controls to minimum (zero beam current).
3. The high voltage should not exceed 33KV.
4. Adjust the Brightness and contrast controls to both extremes. Ensure that the high voltage does not exceed 33KV under any conditions.

4-3-4 FOCUS Adjustment

1. Input a black and white signal.
2. Adjust the tuning control for the clearest picture.
3. Adjust the FOCUS control for well defined scanning lines in the center area of the screen.

4-3-5 Cathode Voltage Adjustment (Screen Adjustment)

1. Input a Toshiba pattern.
2. Go to service mode and select ‘G2-Adjust.
3. Adjust bottom VR of FBT to display “SCREEN ADJUST : OK”
4. Use the Menu or Mute key to complete G2 adjustment.

4-3-6 Purity Adjustment

1. Warm up the receiver for at least 20 minutes.
2. Plug in the CRT deflection yoke and tighten the clamp screw.
3. Plug the convergence yoke into the CRT and set in as shown in Fig. 4-2.
4. Input a black and white signal.
5. Fully demagnetize the receiver by applying an external degaussing coil.
6. Turn the CONTRAST and BRIGHTNESS controls to maximum.
7. Loosen the clamp screw holding the yoke. Slide the yoke backward or forward to provide vertical green belt. (Fig. 4-3).
8. Tighten the convergence yoke.
9. Slowly move the deflection yoke forward, and adjust for the best overall green screen.
10. Temporarily tighten the deflection yoke.
11. Produce blue and red rasters by adjusting the low-light controls. Check for good purity in each field.
12. Tighten the deflection yoke.

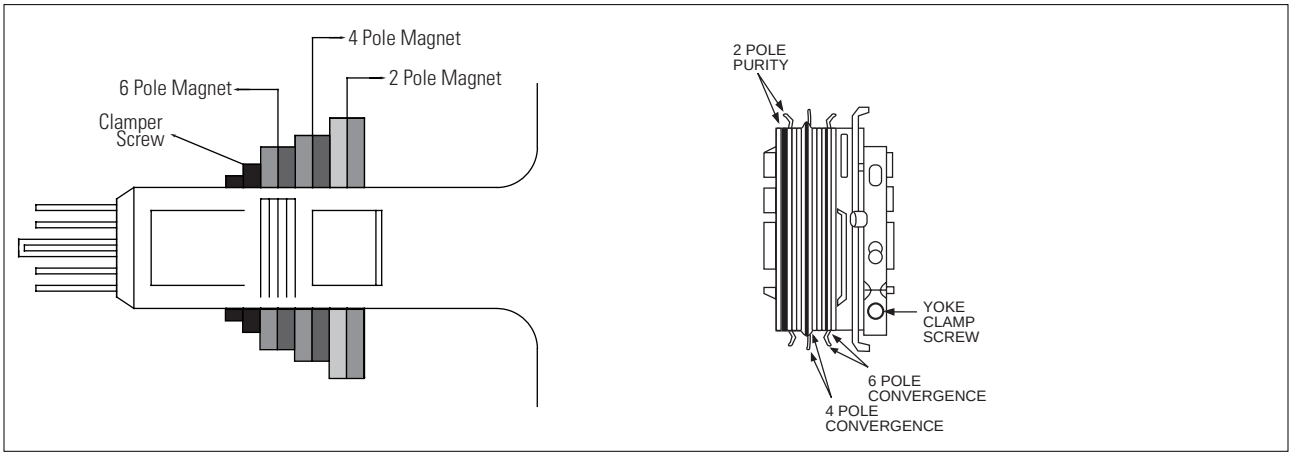

Fig. 4-2 Convergence Magnet Assembly

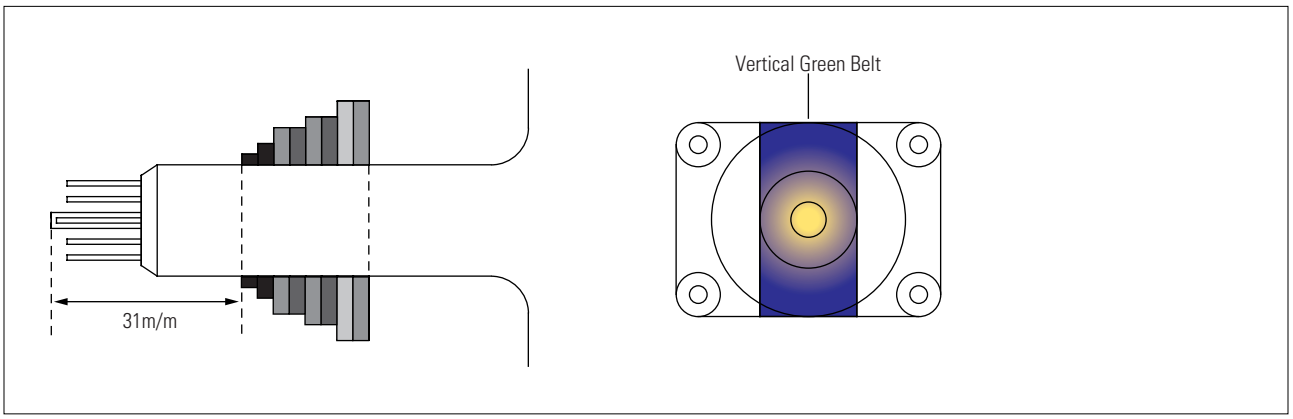

Fig. 4-3 Center Convergence Adjustment

4-3-7 White Balance Adjustment

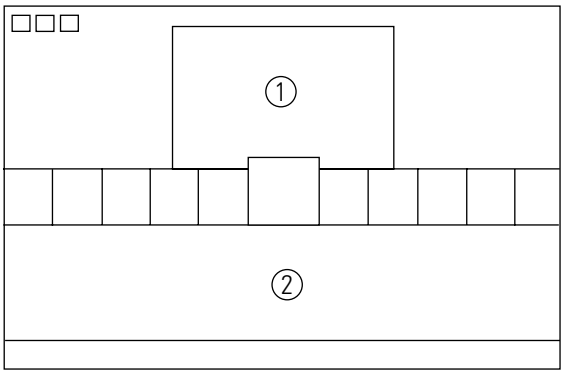

Fig. 4-4

(a) Set up

1. Warm up the TV for at least 30 minutes in the Aging Mode (OSD White). This mode is displayed by entering the following sequence:

   DISPLAY →FACTORY → FACTORY

2. Input a Toshiba pattern.

(b) Low-Light Adjustment

1. Set SBT to 1.5 fL in the Factory Service Mode with using CA100. See Fig. 4-4.

2. Adjust RG,BG so that the levels are suitable to each local area.

(c) High-Light Adjustment

1. Set SCT to 45 FL in the Factory Service Mode with using CA100.
   See Fig. 4-4 .

4-3-8 Center Convergence Adjustment

1. Warm up the receiver for at least 20 minutes.

2. Adjust the two tabs of the 4 pole magnets to change the angle between them. Superimpose the red and blue vertical lines in the center area of the screen.

3. Adjust the Brightness and Contrast controls for a well defined picture.

4. Adjust the two-tab pairs of the 4 pole magnets, and change the angle between them. Superimpose the red and the blue vertical lines in the center area of the screen.

5. Turn the both tabs at the same time, keeping the angle constant, and superimpose the red and blue horizontal line in the center of the screen.

6. Adjust the two-tab pairs of the 6-pole magnets to superimpose the red and blue line onto the green. (Changing the angle affects the vertical lines, and rotating both magnets affects the horizontal lines.)

7. Repeat adjustments 2~6, if necessary.

8. Since the 4-pole magnets and 6-pole magnets interact, the dot movement is complex (Fig. 4-5).

Fig. 4-5 Center Convergence Adjustment

4-3-9 RF AGC Adjustment

Set the AGC data to 33 (Factory Mode).

4-3-10 Sub-Color Adjustment

Set NSR data to 10 (Factory Mode).

4-3-11 Geometry Adjustment

SC →VS→VA→VSL→HS

1. Input a lion head pattern.
2. Set the SC (S-Correction) as 29 and VS(Vertical Shift) 31 so that the lion head circle becomes oval.
3. Adjust with VA (Vertical Amplitude) so that the top margin of the picture is 4.

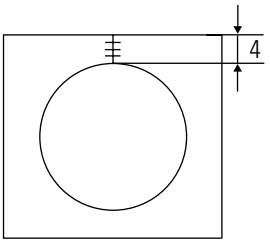

Fig. 4-7

4. Adjust with VSL (Vertical-Slope) so that the bottom margin of the picture is 4.

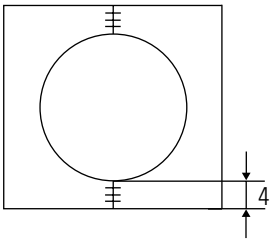

Fig. 4-8

5. Adjust with HS (Horizontal Shift) so that the lion-head pattern and CRT centers are aligned.

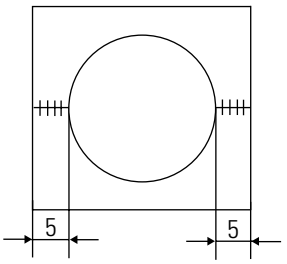

Fig. 4-9

6. Adjust EWID (EW Width) so that the left and right margins of the picture are 5.
7. Input a cross-hatch pattern.

8. Adjust EW Geometry

1 HPAR (Horizontal Parallelogram)

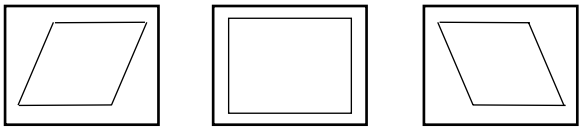

2 HBOW (Horizontal Bow)

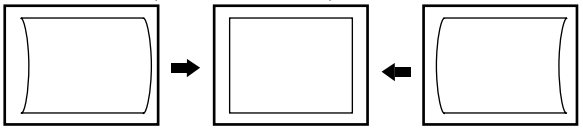

3 EWID (EW Width)

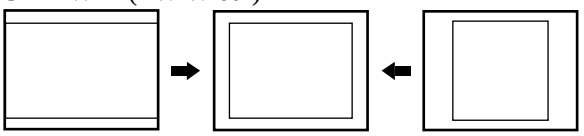

4 EPAR (EW Parabola)

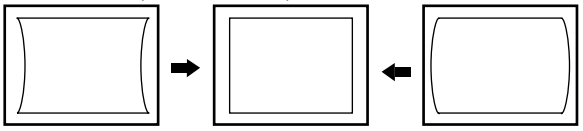

5 EUCN (EW Upper Coner)

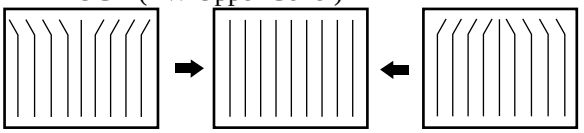

6 ELCN (EW Lower Coner)

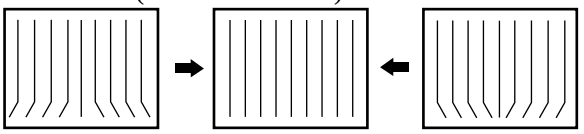

7 ETRP (EW Trapezivm)

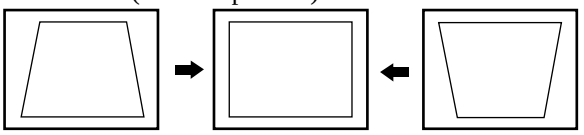

MEMO

5. Troubleshooting

5-1 No Power

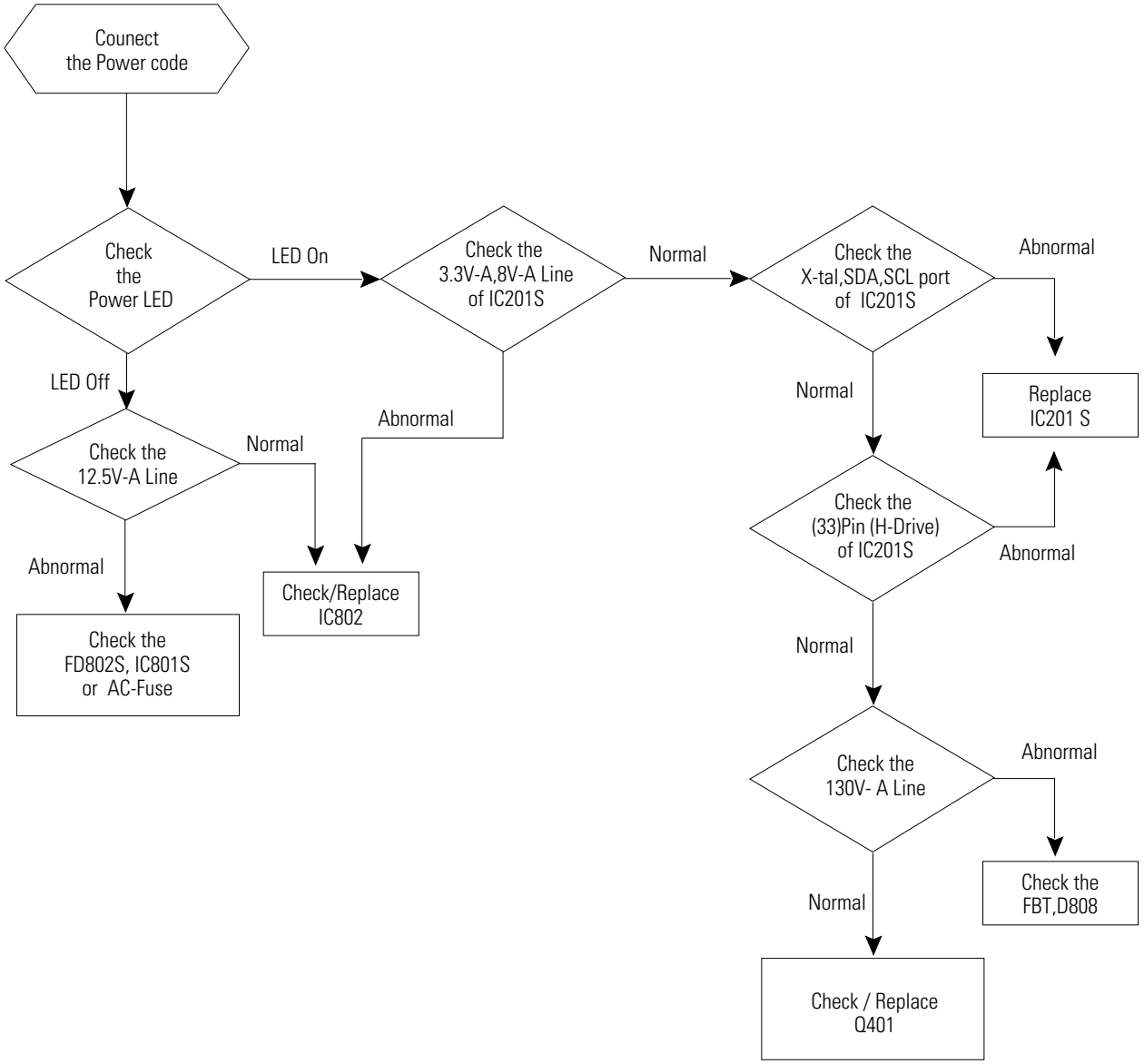

5-2 No Video (Sound OK)

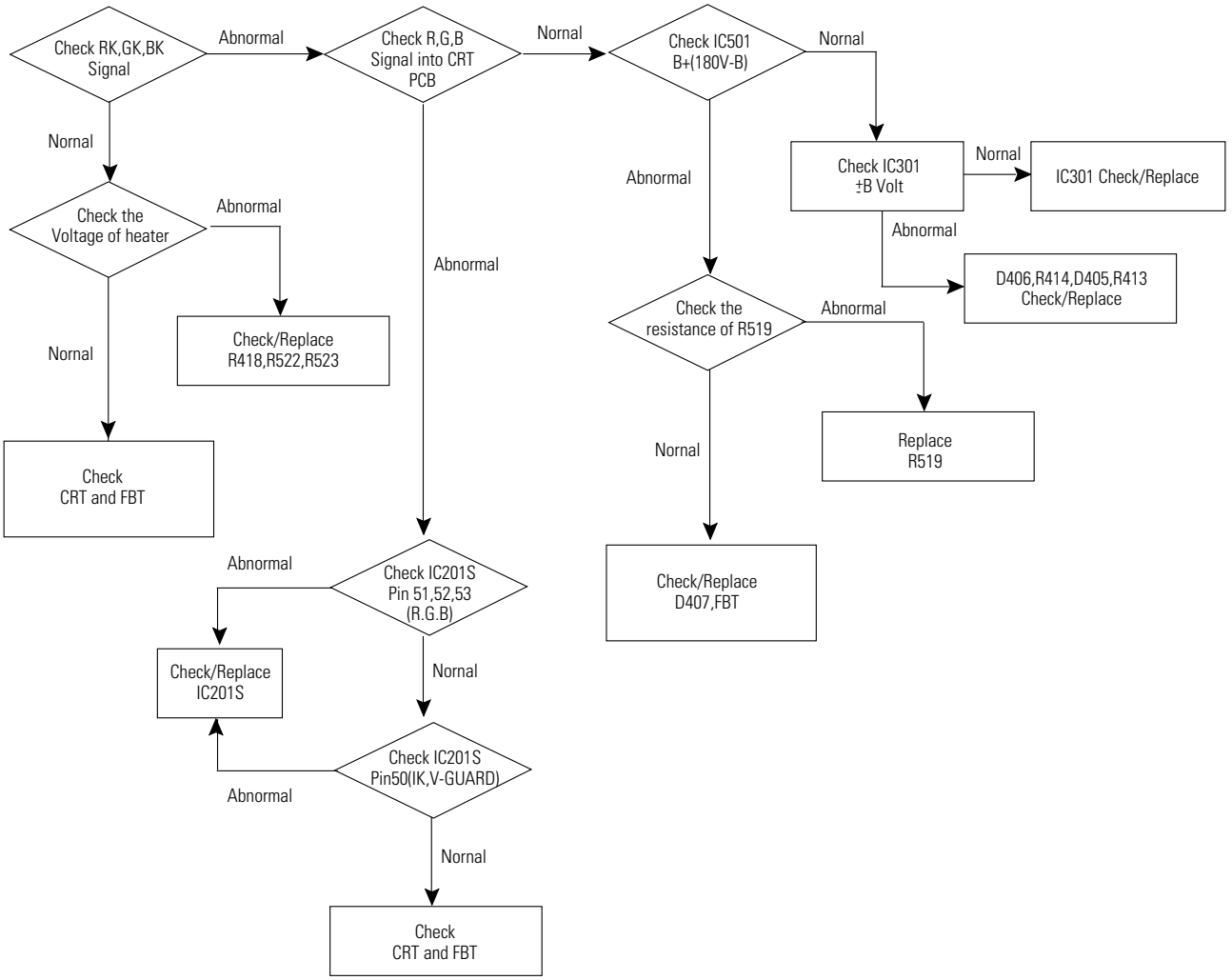

5-3 No Sound (Video OK)

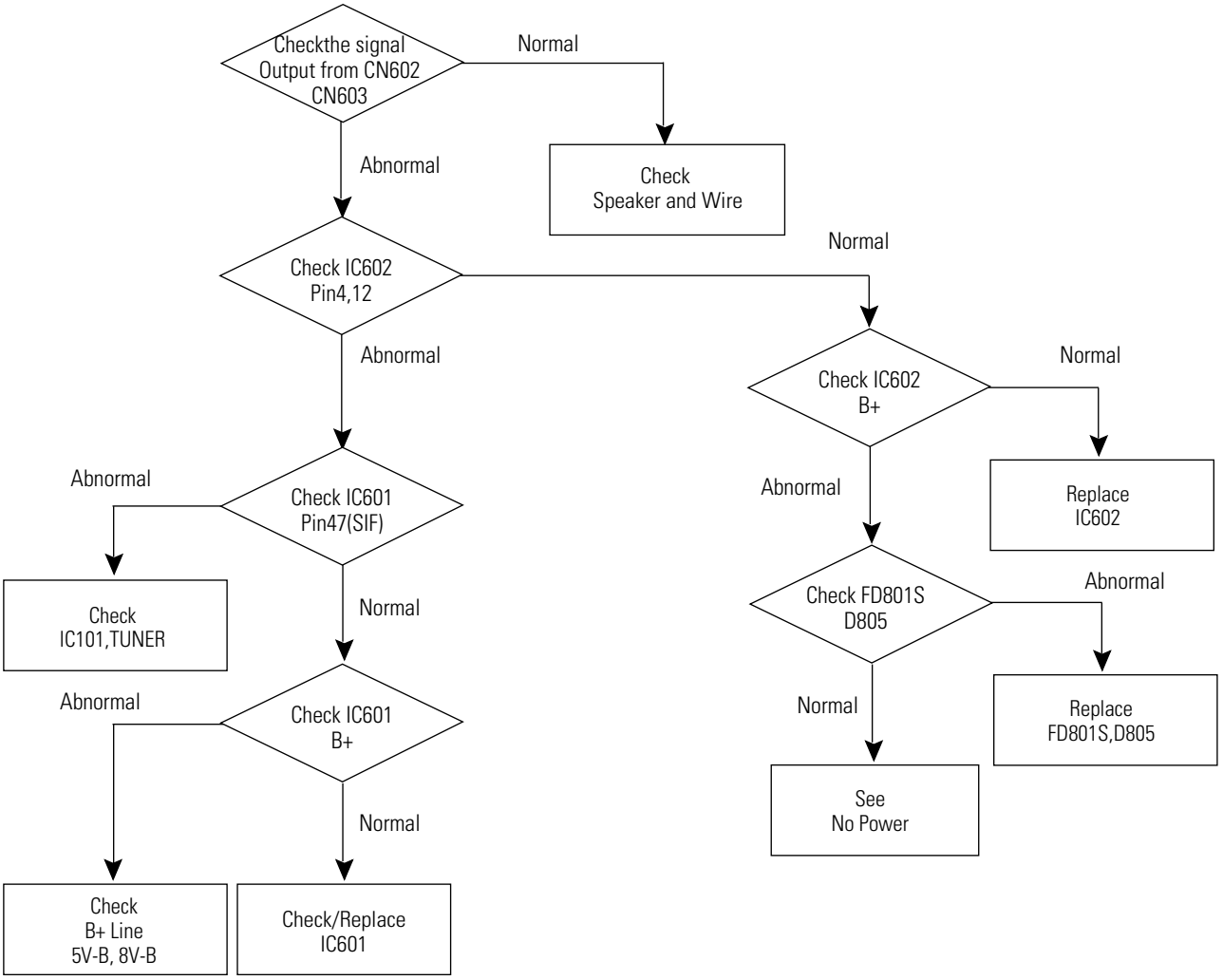

5-4 Horizontal Lines Appear or Screen

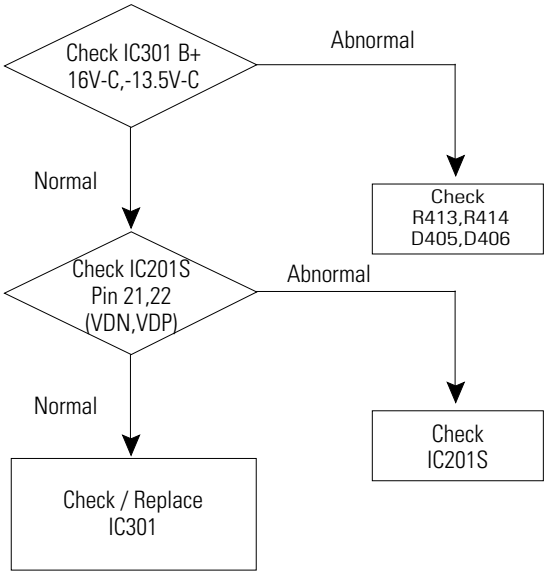

6. Exploded View & Parts List

6-1 CL29K5MQKX/XAP

You can search for the updated part code through ITSELF web site.
URL : http://itself.sec.samsung.co.kr

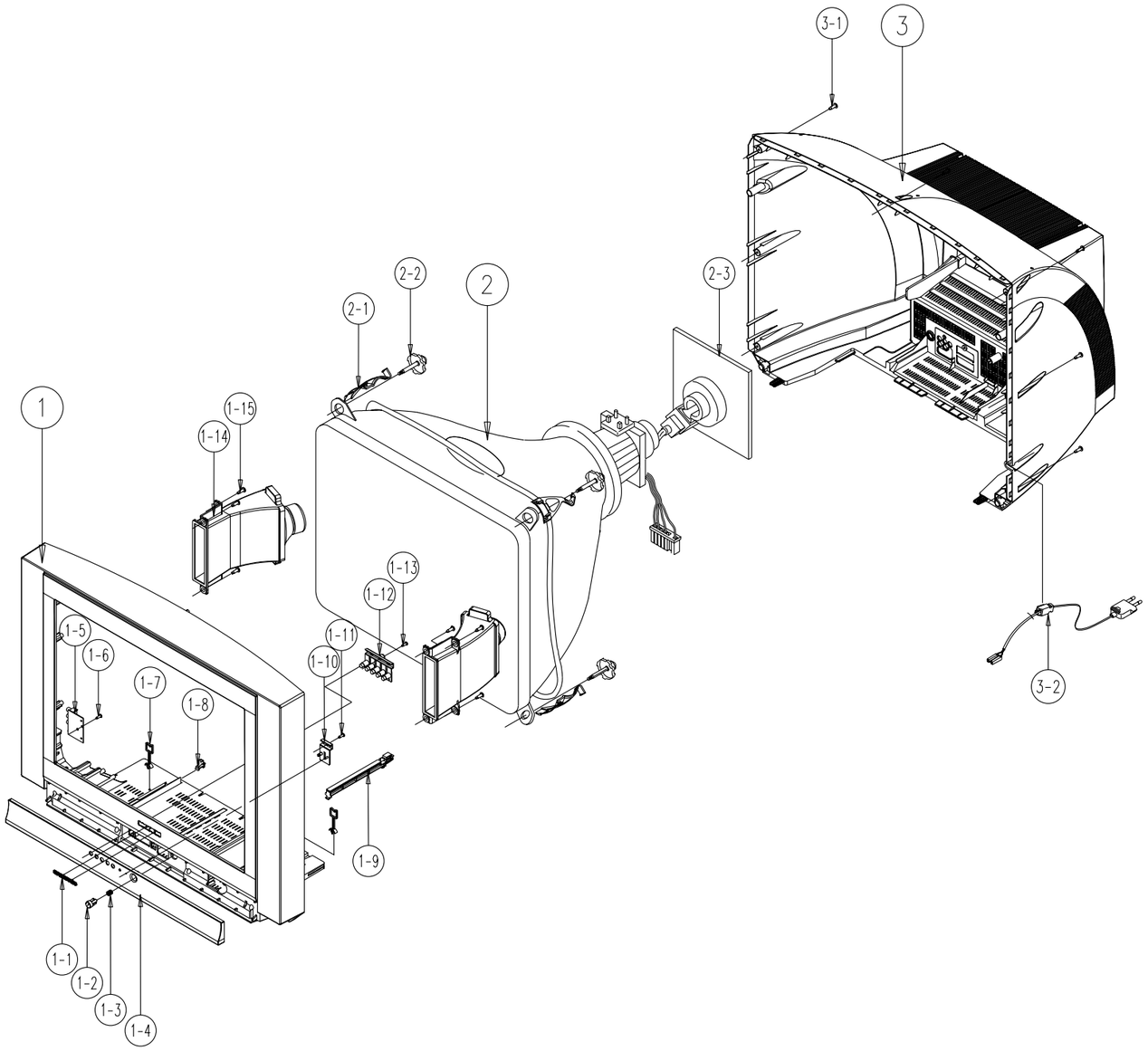

No	Code No	Description;Specification	Q'ty	Remark
1	AA64-03418B	CABINET FRONT;29K5,HIPS,HB,G4309,SV012 K	1	CF
1-1	AA64-70117B	BADGE-BRAND;-,AL,-,-,L65,R2000,SILVER,SS	1	BADGE
1-2	AA64-02629A	KNOB-POWER;29K5,ABS HB,G3676,SVM-3012	1	KP
1-3	AA61-60003J	SPRING ETC-CS;-,SUS304,-,-,OD6,N7,OD6,-,	1	SPRING
1-4	AA96-00906S	ASSY COVER P-FRONT;29K5,XAX,HIPS HB,G430	1	F/C
1-5	AA96-01156A	ASSY MISC,A/V SIDE,CFT2791KX/SMS;K57A	1	APAVS
1-6	6003-001268	SCREW-TAPTITE;TH,+,B,M4.0,L12.0,ZPC(YEL)	2	AV+CF
1-7	AA65-00011B	CLAMP-WIRE;ALL MODEL,NYLON 66,V2,NTR,15M	1	CWFCL
1-8	AA61-40113A	STOPPER-PCB;-,ABS,HB,NTR.	1	SP
1-10	AA64-02632A	WINDOW-RMC,LED;29K5,PC,CLR	1	WR
1-11	6003-001026	SCREW-TAPTITE;RH,+,B,M4,L15,ZPC(BLK),SWR	1	WR+CF
1-12	AA64-02635A	KNOB-CONTROL;29K5,ABS HB,G3676,SVM-3012	1	KC
1-13	6003-001026	SCREW-TAPTITE;RH,+,B,M4,L15,ZPC(BLK),SWR	1	KC+CF
1-14	AA91-00507A	ASSY HOLDER SPK;-,-,8OHM/15W,-,ASSY HOLD	1	AHS
1-15	6006-001095	SCREW-ASS'Y TAPT;WP,BH,+,M4,L12,ZPC(YEL)	4	SPK+CF
2	AA03-00273A	CRT COLOR;A68QCP891X100 ,380MG,1.11MH,14	1	CRT
2-1	AA60-10050V	SCREW-ASSY;WC,HH,+,M6,L30,SWRCH18A,ZPC(S	4	CRT+CF
2-2	AA65-00019A	CLAMP CORE-D,COIL;25-34,NYLON 66,V2,NTR	4	C/CORE
2-3	3704-000114	SOCKET CRT;14P,29.1,35.5SN,1SH09S/BK	1	VA999
3	AA64-03417B	CABINET BACK;29K5,HIPS,HB,G4309	1	C/B
3-1	6003-001026	SCREW-TAPTITE;RH,+,B,M4,L15,ZPC(BLK),SWR	7	CB+CF
3-2	AA96-20109C	ASSY PWR-CORD;CP2/NO(4.0)H/C300,KKP419C,	1	PWR/AC

7. Electrical Parts List

7-1 CL29K5MQKX/XAP

Loc. No.	Code No.	Description ; Specification	Remark
		ASSY CHASSIS	
1 A/CHASSIS	AA91-06211W	ASSY CHASSIS;CL29K5MQKX/STR,K57A	
2 A/MAIN	AA94-13064A	ASSY PCB MAIN;29K5,K57A,LATIN	
3	0202-000008	SOLDER-WIRE;S63S-D3.0,S63A,D3,63/37	
3	0202-000187	SOLDER-WIREFLUX;-,RS60S,D1.2,6	
3	0204-000442	SOLVENT;CH3-CH5H-CH396%IM-1000	
3	0204-001024	FLUX;DF-96TVS,-,20%,-	
⚠ 3 D801S	AA96-00276C	ASSY H/S;-,BRIDGE ,AA62-00052A,GSIB660,	
4	0205-000129	GREASE-SILICON;SC102,JAPAN	
4	0402-001399	DIODE-BRIDGE;GSIB660,600V,6A,SIP-4,BK	
4	6003-000335	SCREW-TAPTITE;RH,+,2S,M3,L8,ZPC(YEL),SWR	
4	AA60-30003A	WASHER;-,-,-,-,-,T1.5,-,SBHG-1	
4	AA62-00052A	HEAT SINK-PS;-,-,-,SILVER,HOLE 18.5mm, 2	
3 D404	0402-001296	DIODE-RECTIFIER;FMP-3FU,1500V,5A,T0-3PF	
⚠ 3 PC801S	0604-001038	PHOTOCOUPLER;TR,130-260%,200MW	
3 ICW01	1001-000211	IC-VIDEO SWITCH;NJM2235D,-,DIP,8P,300MIL	
3 IC202	1103-001200	IC-EEPROM;M24C08-WBN6,1024x8Bit,DIP,8P,3	
3 IC601	1204-001662	IC-SOUND PROCESSOR;MSP3425G-B7,DIP,52P,5	
⚠ 3 NT801S	1404-001045	THERMISTOR NTC;4.7OHM,15%,2900K,35.0MW,T	
⚠ 3 PT801S	1404-001264	THERMISTOR-PTC;4.5OHM,+30/-20%,220V,290V	
⚠ 3 CY801S	2201-000446	C-CERAMIC,AC;CK45PE400V332-M(T	
⚠ 3 CR403S	2306-000327	C-FILM;CF922P1.6KVT632-H-25/85	
⚠ 3 CX801S	2306-000318	C-FILM,MPPF;220NF,20%,250V,-,2	
⚠ 3 CR406S	2306-001017	C-FILM,MPPF;680NF,5%,400V,26X1	
3 C803	2401-003031	C-AL;470uF,20%,450V,GP,BK,35x45mm,1	
3 C821	2401-003633	C-AL;220UF,20%,160V,GP,ST,22X25MM,1	
⚠ 3 SF101S	2904-001107	FILTER-SAW AV;45.75MHz,SIP5K,TP,12.6dB,N	
⚠ 3 SF102S	2904-001418	FILTER-SAW AV;45.75MHZ,-,ST,-,-,-	
⚠ 3 RL801S	3501-001040	RELAYPOWER;12VDC,500MW,10A,1FO	
⚠ 3 FP801S	3601-000293	FUSE-CARTRIDGE;250V,5A,SLOW-BLOW,GLASS,5	
3 JA701	3722-001333	JACK-RCA9P,3.2mm,NI,BLK	
3 JA702	3722-001423	JACK-RCA;3P+S1P,3.4mm,NI,BLK,-	
⚠ 3 IC201S	AA09-00316A	IC MICOM;TDA9592PS/N1/3I,SPM-464A,64P,3.	
⚠ 3 T444S	AA26-00057A	TRANS-FBT;-,FUH-29A001B(S),25/29,130	
⚠ 3 T801S	AA26-00179C	TRANS SWITCHING;EER4950,K57A,CFT2791KX,9	
⚠ 3 T401A	AA26-50001M	TRANS HORIZ DRIVE;-,80MH,520UH,4UH,E	
3 L808	AA27-00098A	COIL CHOKE;-,-,24uH,10%,-,0.1,3.0A,DR10X	
3 L409	AA27-00056A	COIL HORIZ. WIDTH;-,600uH,YL9N 15x27.5 C	
3 L410	AA27-00067A	COIL HORIZ. WIDTH;-,240uH,YL9N 12x20 C:6	
⚠ 3 LX801S	AA29-00011A	FILTER LINE NOISE;CZ32W8,-,0.20MAX,1.5KV	
3 WG	AA39-20010B	LEAD-CONNECTOR,ASSY;-,YFH800-01,500MM,1P	
⚠ 3 TU01S	AA40-00073A	TUNER-TECC1040PG32A(S),181CH,45.75MHZ,75	
3 CN603	3711-002644	POST-HEADER;67094-005(AUTO)	
3 CN502	3711-002645	POST-HEADER;67094-006(AUTO)	
3 CN701	3711-002647	POST-HEADER;67094-008(AUTO)	
3 CN501	3711-002648	POST-HEADER;67094-009(AUTO)	
3 Q801	0502-000242	TR-POWER;KSA614,PNP,-80V,-55V,	
3 Q402	0502-001007	TR-POWER;KSC2073-H2,NPN,150V,1	
3 Q401	AA96-00624A	ASSY H/S;-,POWER,AA62-00057A,KSD5703,WA	
4	0205-000129	GREASE-SILICON;SC102,JAPAN	
4	0502-001136	TR-POWER;KSD5703,NPN,70W,TO-3PF,ST,8-	
4	6003-000333	SCREW-TAPTITE;RH,+,2S,M3,L10,ZPC(YEL),SW	
4	AA60-30001A	WASHER-PLATE;-,M3,ID3.5,15X8.5,T1.0,-,SB	
4	AA62-00057A	HEAT SINK-PS;-,-,T1.0,-,41*20*60,D2,-,-,	
⚠ 3 IC802	AA96-00245A	ASSY H/S;-,-,AA62-00055A,KA7632,-	
4	1203-001939	IC-POSI.FIXED REG.;7632,SIP,10P,-,PLASTI	
4	6003-000334	SCREW-TAPTITE;RH,+,2S,M3,L6,ZP	
4	AA62-00055A	HEAT SINK-PS;-,-,T1.0,-,35*15*25,D1,-,-,	
⚠ 3 IC801S	AA96-50371J	ASSY H/S;BRKT+SCREW,KA5Q1265RF,OIL SILIC	
4	0205-000129	GREASE-SILICON;SC102,JAPAN	
4	1203-002597	IC-PWM CONTROLLER;KA5Q1265RF-YDTU,TO-3PF	
4	6003-000333	SCREW-TAPTITE;RH,+,2S,M3,L10,ZPC(YEL),SW	
4	AA61-11028A	BRACKET-IC;SECC,T1.0,-	
4	AA62-30181H	HEATSINK-ES;-,AL6063EXTR.,2,WHT,50MM,-	
3 IC602	AA96-50398A	ASSY-H/S;-,-,AA62-30182E,TDA7297,-	
4	0205-000129	GREASE-SILICON;SC102,JAPAN	
4	1201-001064	IC-POWERAMP;7297,ZIP,15P,-,DUA	
4	6003-000333	SCREW-TAPTITE;RH,+,2S,M3,L10,ZPC(YEL),SW	
4	AA62-30182E	HEAT-SINK,ES;-,A6063 EXTR,-,WHT,-,-,-,40	
3 IC301	AA96-50406G	ASSY H/S;,POWER,AA62-30180K,K57A	
4	1204-001807	IC-VERTICAL PROCESSO;LA7841,SIP,7P,708MI	
4	6003-000333	SCREW-TAPTITE;RH,+,2S,M3,L10,ZPC(YEL),SW	
4	AA62-30180K	HEATSINK-ES;-,A6063EXTR,-,WHT,50/13,-,	
4	0205-000129	GREASE-SILICON;SC102,JAPAN	
⚠ 3 D805	BP96-00020F	ASSY HEAT SINK P;H/S TR,SCREW,FFPF10U20S	
4	0205-000129	GREASE-SILICON;SC102,JAPAN	
4	0402-001375	DIODE-RECTIFIER;FFPF10U20S,200V,10A,TO-2	
4	6003-000335	SCREW-TAPTITE;RH,+,2S,M3,L8,ZPC(YEL),SWR	
4	AA62-00045A	HEAT SINK-PS;-,-,T1.0,-,-,DREAM,-,-,-,-,	
⚠ 3 D808	BP96-00020J	ASSY HEAT SINK P;H/S TR,SCREW,FMG-G2CS,O	
4	0205-000129	GREASE-SILICON;SC102,JAPAN	
4	0402-001230	DIODE-RECTIFIERFMG-G2CS,1000V,3A,TO-22	
4	6003-000335	SCREW-TAPTITE;RH,+,2S,M3,L8,ZPC(YEL),SWR	
4	AA62-00045A	HEAT SINK-PS;-,-,T1.0,-,-,DREAM,-,-,-,-,	
⚠ 3 PWR/AC	AA96-20109C	ASSY PWR-CORD;CP2/NO(4.0)H/C300,KKP419C,	
4	AA39-10006X	POWER-CORD;-,KKP419C,KLCE-2F,2.286MT	
4	AA61-20284A	HOLDER P CORD;PP,VO,BLK,KE-002	
3 L/PQS	AA68-01018A	LABEL-PQS,-,50mmX,13,-,WHITE,-	
⚠ 3 CR402S	2301-001037	C-FILM,PPF;6.8NF,3%,1600V,TP,2	
⚠ 3 LR401S	AA27-00099A	COIL LINEARITY;23.5uH,23.5uH,DR14x15C:5.	
3 QE01	0505-001723	FET-SILICON;FQP630TSTU,N,200V,9A,0.4OHM,	
3 L405	AA27-00057A	COIL HORIZ. WIDTH;-,10mH,YL-9N 15x27.5 C	
3 ICE01	1202-000103	IC-VOLTAGECOMP.393,DIP,8P,300MIL,DUAL,	
3 SW201	3404-001004	SWITCH TACT;12V,50MA,160GF8.4X22.7MM	
3 RM201	AA32-00015A	MODULE-REMOCON;FRP-3521H31,38KHZ,940MM,M	
3 C406	2301-001296	C-FILM,MPPF;720NF,5%,400V,BK,26X15.5X20M	
3 LD201	AA96-00555A	ASSY LED GUIDE;-,-,UEX-LD-030,GREEN	
3 A/AUTO	AA97-13903Q	ASSY AUTO-MAIN;CL29K5MQKX/XAX,K57A	
4 D202	0401-000005	DIODE;1N4148,100V,300mA,1V,8nS,TAPING	
4 D206	0401-000005	DIODE;1N4148,100V,300mA,1V,8nS,TAPING	
⚠ 4 D804	0401-000005	DIODE;1N4148,100V,300mA,1V,8nS,TAPING	
⚠ 4 D809	0401-000005	DIODE;1N4148,100V,300mA,1V,8nS,TAPING	
⚠ 4 D811	0401-000005	DIODE;1N4148,100V,300mA,1V,8nS,TAPING	
4 DZ403	0401-000005	DIODE;1N4148,100V,300mA,1V,8nS,TAPING	
4 DE01	0401-000005	DIODE;1N4148,100V,300mA,1V,8nS,TAPING	
4 D408	0401-000005	DIODE;1N4148,100V,300mA,1V,8nS,TAPING	
4 D304	0401-000005	DIODE;1N4148,100V,300mA,1V,8nS,TAPING	
⚠ 4 D802	0401-000006	DIODE-SWITCHING;BAV21,250MA,400MW,50NS,2	
⚠ 4 D803	0401-000006	DIODE-SWITCHING;BAV21,250MA,400MW,50NS,2	
4 D402	0402-000132	DIODE-RECTIFIER;1N4004,400V,1A,DO-41	
4 D403	0402-000132	DIODE-RECTIFIER;1N4004,400V,1A,DO-41	
4 D951	0402-000132	DIODE-RECTIFIER;1N4004,400V,1A,DO-41	
⚠ 4 D807	0402-000493	DIODE-RECTIFIER;1R5GU41,400V,1	
4 D405	0402-000534	DIODE-RECTIFIER;RG10V,400V,1.5	
4 D401	0402-000540	DIODE-RECTIFIER;RU20A,600V,1.5	
4 D406	0402-000540	DIODE-RECTIFIER;RU20A,600V,1.5	
4 DE04	0402-000540	DIODE-RECTIFIER;RU20A,600V,1.5	
4 D303	0402-000546	DIODE-RECTIFIER;TVR10G,400V,1.	
4 D407	0402-000546	DIODE-RECTIFIER;TVR10G,400V,1.	
4 D409	0402-000546	DIODE-RECTIFIER;TVR10G,400V,1.	
4 DE02	0402-000546	DIODE-RECTIFIER;TVR10G,400V,1.	
4 DZ101	0403-000508	DIODE-ZENER;MTZJ5.6B,5.6V,5.45-5.73V,500	
4 DZ204	0403-000508	DIODE-ZENER;MTZJ5.6B,5.6V,5.45-5.73V,500	
4 DZ213	0403-000508	DIODE-ZENER;MTZJ5.6B,5.6V,5.45-5.73V,500	
4 DZ214	0403-000508	DIODE-ZENER;MTZJ5.6B,5.6V,5.45-5.73V,500	
4 DZ215	0403-000508	DIODE-ZENER;MTZJ5.6B,5.6V,5.45-5.73V,500	
4 DZ402	0403-000508	DIODE-ZENER;MTZJ5.6B,5.6V,5.45-5.73V,500	
4 DZ601	0403-000508	DIODE-ZENER;MTZJ5.6B,5.6V,5.45-5.73V,500	
4 DZ602	0403-000508	DIODE-ZENER;MTZJ5.6B,5.6V,5.45-5.73V,500	
4 DZ805	0403-000508	DIODE-ZENER;MTZJ5.6B,5.6V,5.45-5.73V,500	
4 DZ806	0403-000508	DIODE-ZENER;MTZJ5.6B,5.6V,5.45-5.73V,500	
4 DZ809	0403-000508	DIODE-ZENER;MTZJ5.6B,5.6V,5.45-5.73V,500	
4 DZ201	0403-000508	DIODE-ZENER;MTZJ5.6B,5.6V,5.45-5.73V,500	
4 DZ812	0403-000508	DIODE-ZENER;MTZJ5.6B,5.6V,5.45-5.73V,500	

Loc. No.	Code No.	Description ; Specification	Remark
4 DZ802	0403-000699	DIODE-ZENER;TZP27B,27V,27-30.8	
4 DZ306	0403-000700	DIODE-ZENER;TZP33A,33V,31-35V,	
4 DZ811	0403-000700	DIODE-ZENER;TZP33A,33V,31-35V,	
4 DZ803	0403-000716	DIODE-ZENER;MTZJ4.7B,4.7V,4.55-4.8V,500m	
4 DZ202	0403-000720	DIODE-ZENER;MTZJ9.1B,9.1V,8.57-9.01V,500	
4 DZ205	0403-000720	DIODE-ZENER;MTZJ9.1B,9.1V,8.57-9.01V,500	
4 DZ206	0403-000720	DIODE-ZENER;MTZJ9.1B,9.1V,8.57-9.01V,500	
4 DZ207	0403-000720	DIODE-ZENER;MTZJ9.1B,9.1V,8.57-9.01V,500	
4 DZ209	0403-000720	DIODE-ZENER;MTZJ9.1B,9.1V,8.57-9.01V,500	
4 DZ210	0403-000720	DIODE-ZENER;MTZJ9.1B,9.1V,8.57-9.01V,500	
4 DZ211	0403-000720	DIODE-ZENER;MTZJ9.1B,9.1V,8.57-9.01V,500	
4 DZ212	0403-000720	DIODE-ZENER;MTZJ9.1B,9.1V,8.57-9.01V,500	
4 DZ218	0403-000720	DIODE-ZENER;MTZJ9.1B,9.1V,8.57-9.01V,500	
4 DZ220	0403-000720	DIODE-ZENER;MTZJ9.1B,9.1V,8.57-9.01V,500	
4 DZ221	0403-000720	DIODE-ZENER;MTZJ9.1B,9.1V,8.57-9.01V,500	
4 DZ222	0403-000720	DIODE-ZENER;MTZJ9.1B,9.1V,8.57-9.01V,500	
4 DZ223	0403-000720	DIODE-ZENER;MTZJ9.1B,9.1V,8.57-9.01V,500	
4 DZ224	0403-000720	DIODE-ZENER;MTZJ9.1B,9.1V,8.57-9.01V,500	
4 DZ808	0403-000720	DIODE-ZENER;MTZJ9.1B,9.1V,8.57-9.01V,500	
4 DZ208	0403-000720	DIODE-ZENER;MTZJ9.1B,9.1V,8.57-9.01V,500	
4 DZ216	0403-000720	DIODE-ZENER;MTZJ9.1B,9.1V,8.57-9.01V,500	
4 DZ217	0403-000720	DIODE-ZENER;MTZJ9.1B,9.1V,8.57-9.01V,500	
4 DZ219	0403-000720	DIODE-ZENER;MTZJ9.1B,9.1V,8.57-9.01V,500	
4 DZ801	0403-001211	DIODE-ZENER;MTZJ12B,11.44-12.03V,500MW,D	
4 DZ303	0403-001221	DIODE-ZENER;UZ39BSB,35.36-37.19V,500MW,D	
4 DZ804	0403-001327	DIODE-ZENER;MTZJ18A,16.22-17.06V,500mW,D	
4 DZ301	0403-001328	DIODE-ZENER;MTZJ22A,20.15-21.20V,500mW,D	
4 DZ305	0403-001328	DIODE-ZENER;MTZJ22A,20.15-21.20V,500mW,D	
4 DZ302	0403-001329	DIODE-ZENER;MTZJ24B,22.61-23.77V,500mW,	
4 DZ810	0403-001373	DIODE-ZENER;MTZJ5.1A,4.81V-5.07V,500mW,D	
4 D602	0404-000156	DIODE-SCHOTTKY;RB441Q,10V,100MA,DO-34,TP	
4 D201	0404-000156	DIODE-SCHOTTKY;RB441Q,10V,100MA,DO-34,TP	
4 Q205	0501-000283	TRANSISTOR;KSA539-Y(TAPG)/YTAM	
4 Q206	0501-000283	TRANSISTOR;KSA539-Y(TAPG)/YTAM	
4 Q211	0501-000283	TRANSISTOR;KSA539-Y(TAPG)/YTAM	
4 Q702	0501-000283	TRANSISTOR;KSA539-Y(TAPG)/YTAM	
4 Q301	0501-000283	TRANSISTOR;KSA539-Y(TAPG)/YTAM	
4 Q951	0501-000369	TRANSISTOR;KSC2331-Y(TAPG)	
4 Q203	0501-000389	TRANSISTOR;KSC815-Y(TAPG)/YTAM	
4 Q204	0501-000389	TRANSISTOR;KSC815-Y(TAPG)/YTAM	
4 Q207	0501-000389	TRANSISTOR;KSC815-Y(TAPG)/YTAM	
4 Q208	0501-000389	TRANSISTOR;KSC815-Y(TAPG)/YTAM	
4 Q802	0501-000389	TRANSISTOR;KSC815-Y(TAPG)/YTAM	
4 Q701	0501-000389	TRANSISTOR;KSC815-Y(TAPG)/YTAM	
4 IC603	1203-000515	IC-VOL. DETECTOR;7042,TO-92,3P,177MIL,PL	
⚠ 4 IC803	1203-001217	IC-POST,ADJUSTREG;431,T0-92,3P,4.58MIL,P	
⚠ 4 VX801S	1405-000187	VARISTOR;750V,1250A,12.5x7mm,TP	
4 R231	2001-000005	R-CARBON;390OHM,5%,1/8W,AA,TP,	
4 R903	2001-000005	R-CARBON;390OHM,5%,1/8W,AA,TP,	
4 R906	2001-000005	R-CARBON;390OHM,5%,1/8W,AA,TP,	
4 R289	2001-000011	R-CARBON;75Kohm,5%,1/8W,AA,TP,1.8x3.2mm	
4 R216	2001-000012	R-CARBON;680Kohm,5%,1/8W,AA,TP,1.8x3.2m	
4 R306	2001-000016	R-CARBON(S);1OHM,5%,1/2W,AA,TP	
4 R806	2001-000019	R-CARBON(S);10ohm,5%,1/2W,AA,TP,2.4x6.4m	
4 R405	2001-000020	R-CARBON(S);22OHM,5%,1/2W,AA,T	
4 R817	2001-000020	R-CARBON(S);22OHM,5%,1/2W,AA,T	
4 R417	2001-000085	R-CARBON(S);100KOHM,5%,1/2W,AA	
4 R420	2001-000085	R-CARBON(S);100KOHM,5%,1/2W,AA	
4 R809	2001-000109	R-CARBON(S);470OHM,5%,1/2W,AA,	
4 R316	2001-000258	R-CARBON;1.8Kohm,5%,1/8W,AA,TP,1.8x3.2m	
4 J708	2001-000258	R-CARBON;1.8Kohm,5%,1/8W,AA,TP,1.8x3.2m	
4 R712	2001-000273	R-CARBON;100KOHM,5%,1/8W,AA,TP	
4 R713	2001-000273	R-CARBON;100KOHM,5%,1/8W,AA,TP	
4 R103	2001-000281	R-CARBON;100OHM,5%,1/8W,AA,TP,	
4 R202	2001-000281	R-CARBON;100OHM,5%,1/8W,AA,TP,	
4 R210	2001-000281	R-CARBON;100OHM,5%,1/8W,AA,TP,	
4 R211	2001-000281	R-CARBON;100OHM,5%,1/8W,AA,TP,	
4 R212	2001-000281	R-CARBON;100OHM,5%,1/8W,AA,TP,	
4 R214	2001-000281	R-CARBON;100OHM,5%,1/8W,AA,TP,	
4 R215	2001-000281	R-CARBON;100OHM,5%,1/8W,AA,TP,	
4 R219	2001-000281	R-CARBON;100OHM,5%,1/8W,AA,TP,	
4 R220	2001-000281	R-CARBON;100OHM,5%,1/8W,AA,TP,	
4 R272	2001-000281	R-CARBON;100OHM,5%,1/8W,AA,TP,	
4 R273	2001-000281	R-CARBON;100OHM,5%,1/8W,AA,TP,	
4 R274	2001-000281	R-CARBON;100OHM,5%,1/8W,AA,TP,	
4 R275	2001-000281	R-CARBON;100OHM,5%,1/8W,AA,TP,	
4 R276	2001-000281	R-CARBON;100OHM,5%,1/8W,AA,TP,	

Loc. No.	Code No.	Description ; Specification	Remark
4 R277	2001-000281	R-CARBON;100OHM,5%,1/8W,AA,TP,	
4 R288	2001-000281	R-CARBON;100OHM,5%,1/8W,AA,TP,	
4 R296	2001-000281	R-CARBON;100OHM,5%,1/8W,AA,TP,	
4 R605	2001-000281	R-CARBON;100OHM,5%,1/8W,AA,TP,	
4 R606	2001-000281	R-CARBON;100OHM,5%,1/8W,AA,TP,	
4 R607	2001-000281	R-CARBON;100OHM,5%,1/8W,AA,TP,	
4 R608	2001-000281	R-CARBON;100OHM,5%,1/8W,AA,TP,	
4 R613	2001-000281	R-CARBON;100OHM,5%,1/8W,AA,TP,	
4 R614	2001-000281	R-CARBON;100OHM,5%,1/8W,AA,TP,	
4 RW01	2001-000281	R-CARBON;100OHM,5%,1/8W,AA,TP,	
4 RW02	2001-000281	R-CARBON;100OHM,5%,1/8W,AA,TP,	
4 RW04	2001-000281	R-CARBON;100OHM,5%,1/8W,AA,TP,	
4 RW05	2001-000281	R-CARBON;100OHM,5%,1/8W,AA,TP,	
4 RE07	2001-000281	R-CARBON;100OHM,5%,1/8W,AA,TP,	
4 RW03	2001-000281	R-CARBON;100OHM,5%,1/8W,AA,TP,	
4 R206	2001-000290	R-CARBON;10KOHM,5%,1/8W,AA,TP,	
4 R213	2001-000290	R-CARBON;10KOHM,5%,1/8W,AA,TP,	
4 R258	2001-000290	R-CARBON;10KOHM,5%,1/8W,AA,TP,	
4 R615	2001-000290	R-CARBON;10KOHM,5%,1/8W,AA,TP,	
4 R618	2001-000290	R-CARBON;10KOHM,5%,1/8W,AA,TP,	
4 R619	2001-000290	R-CARBON;10KOHM,5%,1/8W,AA,TP,	
4 R813	2001-000290	R-CARBON;10KOHM,5%,1/8W,AA,TP,	
4 R822	2001-000290	R-CARBON;10KOHM,5%,1/8W,AA,TP,	
4 R835	2001-000290	R-CARBON;10KOHM,5%,1/8W,AA,TP,	
4 RE03	2001-000290	R-CARBON;10KOHM,5%,1/8W,AA,TP,	
4 R315	2001-000290	R-CARBON;10KOHM,5%,1/8W,AA,TP,	
4 R609	2001-000411	R-CARBON;18KOHM,5%,1/8W,AA,TP,	
4 R611	2001-000411	R-CARBON;18KOHM,5%,1/8W,AA,TP,	
4 R248	2001-000343	R-CARBON;1300HM,5%,1/8W,AA,TP,1.8X3.2MM	
4 J213	2001-000429	R-CARBON;1Kohm,5%,1/8W,AA,TP,1.8x3.2mm	
4 R207	2001-000429	R-CARBON;1Kohm,5%,1/8W,AA,TP,1.8x3.2mm	
4 R617	2001-000429	R-CARBON;1Kohm,5%,1/8W,AA,TP,1.8x3.2mm	
4 RE01	2001-000429	R-CARBON;1Kohm,5%,1/8W,AA,TP,1.8x3.2mm	
4 R256	2001-000429	R-CARBON;1Kohm,5%,1/8W,AA,TP,1.8x3.2mm	
4 R717	2001-000429	R-CARBON;1Kohm,5%,1/8W,AA,TP,1.8x3.2mm	
4 R260	2001-000449	R-CARBON;2.2KOHM,5%,1/8W,AA,TP	
4 R261	2001-000449	R-CARBON;2.2KOHM,5%,1/8W,AA,TP	
4 R314	2001-000449	R-CARBON;2.2KOHM,5%,1/8W,AA,TP	
4 R833	2001-000472	R-CARBON;2.7KOHM,5%,1/8W,AA,TP	
4 R907	2001-000472	R-CARBON;2.7KOHM,5%,1/8W,AA,TP	
4 R908	2001-000472	R-CARBON;2.7KOHM,5%,1/8W,AA,TP	
4 R901	2001-000472	R-CARBON;2.7KOHM,5%,1/8W,AA,TP	
4 R904	2001-000472	R-CARBON;2.7KOHM,5%,1/8W,AA,TP	
4 R251	2001-000490	R-CARBON;2000HM,5%,1/8W,AA,TP,	
4 R718	2001-000515	R-CARBON;220OHM,5%,1/8W,AA,TP,	
4 R279	2001-000522	R-CARBON;22KOHM,5%,1/8W,AA,TP,	
4 R716	2001-000522	R-CARBON;22KOHM,5%,1/8W,AA,TP,	
4 R101	2001-000554	R-CARBON;270OHM,5%,1/8W,AA,TP,	
4 R102	2001-000554	R-CARBON;270OHM,5%,1/8W,AA,TP,	
4 R250	2001-000554	R-CARBON;270OHM,5%,1/8W,AA,TP,	
4 R719	2001-000554	R-CARBON;270OHM,5%,1/8W,AA,TP,	
4 R228	2001-000563	R-CARBON;27KOHM,5%,1/8W,AA,TP,1.8X3.2MM	
4 R229	2001-000563	R-CARBON;27KOHM,5%,1/8W,AA,TP,1.8X3.2MM	
4 R814	2001-000563	R-CARBON;27KOHM,5%,1/8W,AA,TP,1.8X3.2MM	
4 R245	2001-000591	R-CARBON;3.3KOHM,5%,1/8W,AA,TP	
4 R401	2001-000613	R-CARBON;3.9KOHM,5%,1/8W,AA,TP	
4 RE04	2001-000613	R-CARBON;3.9KOHM,5%,1/8W,AA,TP	
4 R270	2001-000628	R-CARBON;3000HM,5%,1/8W,AA,TP,	
4 R271	2001-000628	R-CARBON;3000HM,5%,1/8W,AA,TP,	
4 R203	2001-000734	R-CARBON;4.7KOHM,5%,1/8W,AA,TP	
4 R208	2001-000734	R-CARBON;4.7KOHM,5%,1/8W,AA,TP	
4 R209	2001-000734	R-CARBON;4.7KOHM,5%,1/8W,AA,TP	
4 R223	2001-000734	R-CARBON;4.7KOHM,5%,1/8W,AA,TP	
4 R230	2001-000734	R-CARBON;4.7KOHM,5%,1/8W,AA,TP	
4 R236	2001-000734	R-CARBON;4.7KOHM,5%,1/8W,AA,TP	
4 R293	2001-000734	R-CARBON;4.7KOHM,5%,1/8W,AA,TP	
4 R294	2001-000734	R-CARBON;4.7KOHM,5%,1/8W,AA,TP	
4 R829	2001-000734	R-CARBON;4.7KOHM,5%,1/8W,AA,TP	
4 RE08	2001-000734	R-CARBON;4.7KOHM,5%,1/8W,AA,TP	
4 R204	2001-000734	R-CARBON;4.7KOHM,5%,1/8W,AA,TP	
4 R205	2001-000734	R-CARBON;4.7KOHM,5%,1/8W,AA,TP	
4 R221	2001-000739	R-CARBON;4.7MOHM,5%,1/8W,AA,TP	
4 R222	2001-000739	R-CARBON;4.7MOHM,5%,1/8W,AA,TP	
4 R601	2001-000780	R-CARBON;470ohm,5%,1/8W,AA,TP,1.8x3.2mm	
4 R602	2001-000780	R-CARBON;470ohm,5%,1/8W,AA,TP,1.8x3.2mm	
4 R603	2001-000780	R-CARBON;470ohm,5%,1/8W,AA,TP,1.8x3.2mm	
4 R604	2001-000780	R-CARBON;470ohm,5%,1/8W,AA,TP,1.8x3.2mm	

Loc. No.	Code No.	Description ; Specification	Remark
4 R104	2001-000786	R-CARBON;47KOHM,5%,1/8W,AA,TP,	
4 R714	2001-000786	R-CARBON;47KOHM,5%,1/8W,AA,TP,	
4 R246	2001-000793	R-CARBON;47OHM,5%,1/8W,AA,TP,1	
4 R201	2001-000793	R-CARBON;47OHM,5%,1/8W,AA,TP,1	
4 R217	2001-000857	R-CARBON;560OHM,5%,1/8W,AA,TP,	
4 R610	2001-000890	R-CARBON;6.8KOHM,5%,1/8W,AA,TP	
4 R612	2001-000890	R-CARBON;6.8KOHM,5%,1/8W,AA,TP	
4 R136	2001-000924	R-CARBON;680ohm,5%,1/8W,AA,TP,1.8x3.2mm	
4 R257	2001-000924	R-CARBON;680ohm,5%,1/8W,AA,TP,1.8x3.2mm	
4 R105	2001-000947	R-CARBON;7.5KOHM,5%,1/8W,AA,TP	
4 R708	2001-000969	R-CARBON;75OHM,5%,1/8W,AA,TP,1	
4 R711	2001-000969	R-CARBON;75OHM,5%,1/8W,AA,TP,1	
4 R247	2001-000969	R-CARBON;75OHM,5%,1/8W,AA,TP,1	
4 R705	2001-000969	R-CARBON;75OHM,5%,1/8W,AA,TP,1	
4 R706	2001-000969	R-CARBON;75OHM,5%,1/8W,AA,TP,1	
4 R707	2001-000969	R-CARBON;75OHM,5%,1/8W,AA,TP,1	
4 R709	2001-000969	R-CARBON;75OHM,5%,1/8W,AA,TP,1	
4 R710	2001-000969	R-CARBON;75OHM,5%,1/8W,AA,TP,1	
4 R292	2001-000989	R-CARBON ;820Kohm,5%,1/8W,AA,TP,1.8x3.2m	
4 R812	2001-001067	R-CARBON(S);11KOHM,5%,1/2W,AA,TP,2.4X6.4	
4 R402	2001-001077	R-CARBON(S);150OHM,5%,1/2W,AA,	
4 R823	2001-001088	R-CARBON(S);1KOHM,5%,1/2W,AA,TP,2.4X6.4	
4 R824	2001-001088	R-CARBON(S);1KOHM,5%,1/2W,AA,TP,2.4X6.4	
4 R828	2001-001088	R-CARBON(S);1KOHM,5%,1/2W,AA,TP,2.4X6.4	
4 R404	2001-001114	R-CARBON(S);270OHM,5%,1/2W,AA,	
4 R825	2001-001131	R-CARBON(S);33KOHM,5%,1/2W,AA,	
4 R803	2001-001150	R-CARBON(S);470KOHM,5%,1/2W,AA	
4 R804	2001-001150	R-CARBON(S);470KOHM,5%,1/2W,AA	
4 R827	2001-001168	R-CARBON(S);6.8KOHM,5%,1/2W,AB	
4 R807	2001-001170	R-CARBON(S);6.8OHM,5%,1/2W,AB,	
4 R808	2001-001170	R-CARBON(S);6.8OHM,5%,1/2W,AB,	
4 R810	2001-001192	R-CARBON(S);820OHM,5%,1/2W,AB,	
4 R403	2001-001079	R-CARBON(S);15OHM,5%,1/2W,AB,T	
⚠ 4 RY801S	2002-001012	R-COMPOSITION;8.2MOhm,5%,1/2W,AA,TP,3.7X	
4 R313	2003-000537	R-METALOXIDE(S);1KOHM,5%,1W,AD	
4 R408	2003-000540	R-METALOXIDE(S);1KOHM,5%,2W,AD	
4 R801	2003-000586	R-METALOXIDE(S);22KOHM,5%,2W,A	
4 R802	2003-000586	R-METALOXIDE(S);22KOHM,5%,2W,A	
4 R830	2003-000586	R-METALOXIDE(S);22KOHM,5%,2W,A	
4 R831	2003-000586	R-METALOXIDE(S);22KOHM,5%,2W,A	
4 R841	2003-000586	R-METALOXIDE(S);22KOHM,5%,2W,A	
4 R818	2003-000998	R-METALOXIDE;3000HM,5%,2W,AF,T	
4 R832	2003-001035	R-METALOXIDE(S);27OHM,5%,2W,AF	
4 R419	2003-001040	R-METALOXIDE(S);47Kohm,5%,2W,AF,TP,3.9x1	
4 R423	2003-002007	R-METAL OXIDE(S);4.7KOHM,5%,2W,AF,TP,3.9	
4 R407	2003-002008	R-METAL OXIDE(S);18KOHM,5%,2W,AF,TP,3.9X	
4 R819	2003-002064	R-METALOXIDE;7.5OHM,5%,2W,AF,T	
4 R820	2003-002064	R-METALOXIDE;7.5OHM,5%,2W,AF,T	
4 R821	2003-002064	R-METALOXIDE;7.5OHM,5%,2W,AF,T	
4 R309	2003-002150	R-METAL OXIDE;270OHM,5%,2W,AG,TP,6X16MM	
4 R310	2003-002150	R-METAL OXIDE;270OHM,5%,2W,AG,TP,6X16MM	
4 R305	2004-001371	R-METAL(S);1.5KOHM,1%,1/2W,AA,	
4 R307	2004-001371	R-METAL(S);1.5KOHM,1%,1/2W,AA,	
⚠ 4 RR401S	2004-001390	R-METAL(S);1KOHM,2%,1/2W,AA,TP	
4 R834	2004-001889	R-METAL(S);127KOHM,1%,1/2W,AA,TP,2.5X6.5	
4 R416	2004-001402	R-METAL(S);6.8KOHM,1%,1/2W,AA,	
4 R280	2004-001914	R-METAL;39KOHM,2%,1/8W,AA,TP,1	
4 R826	2004-001983	R-METAL;2.49KOHM,1%,1/2W,AA,TP,2.4X6.4	
4 R815	2008-000205	R-FUSIBLE(S);10OHM,5%,1/2W,AF,	
4 R413	2008-000253	R-FUSIBLE(S);0.47OHM,5%,1W,AF,	
4 R414	2008-000253	R-FUSIBLE(S);0.47OHM,5%,1W,AF,	
4 R312	2008-001013	R-FUSIBLE(S);1.2ohm,5%,2W,AF,TP,3.9x10mm	
4 R308	2008-001015	R-FUSIBLE;1.50HM,5%2WAF,TP39X10	
⚠ 4 CR405S	2201-000132	C-CERAMIC,DISC;100PF,10%,500V,Y5P,6X3MM,	
4 C302	2201-002103	C-CERAMIC,DISC;0.015nF,5%,500V,NP0,TP,6.	
4 C601	2201-000304	C-CERAMIC,DISC0.001nF,0.25pF,50V,NP0,TP	
4 C602	2201-000304	C-CERAMIC,DISC0.001nF,0.25pF,50V,NP0,TP	
4 C801	2201-000332	C-CERAMIC,AC;CK45PTAPGE250V222	
4 C802	2201-000332	C-CERAMIC,AC;CK45PTAPGE250V222	
4 C823	2201-000370	C-CERAMIC,DISC;220PF,10%,50V,Y5P,TP	
4 C408	2201-000556	C-CERAMIC,DISC;470PF,10%,500V,	
4 C411	2201-000556	C-CERAMIC,DISC;470PF,10%,500V,	
4 C413	2201-000556	C-CERAMIC,DISC;470PF,10%,500V,	
4 C818	2201-000556	C-CERAMIC,DISC;470PF,10%,500V,	
4 C208	2201-000573	C-CERAMIC,DISC;47PF,5%,50V,NPO	
4 C210	2201-000573	C-CERAMIC,DISC;47PF,5%,50V,NPO	
4 C403	2201-000599	C-CERAMIC,DISC;560PF,10%,500V,	

Loc. No.	Code No.	Description ; Specification	Remark
4 C816	2201-000599	C-CERAMIC,DISC;560PF,10%,500V,	
4 C405	2201-000639	C-CERAMIC,DISC;680PF,10%,2KV,Y5P,-,5MM,T	
4 CW04	2201-000982	C-CERAMIC,DISC;10NF,+80-20%,50	
4 C820	2201-000991	C-CERAMIC,HIC;CK45(T)B2KV561-K	
4 C110	2202-000127	C-CERAMIC,MLC-AXIAL;10NF,+80-2	
4 C120	2202-000127	C-CERAMIC,MLC-AXIAL;10NF,+80-2	
4 C603	2202-000286	C-CERAMIC,MLC-AXIAL;56PF,5%,50	
4 C629	2202-000286	C-CERAMIC,MLC-AXIAL;56PF,5%,50	
4 C223	2202-000252	C-CERAMIC,MLC-AXIAL;4.7nF,10%,50V,X7R,TP	
4 C205	2202-000796	C-CERAMIC,MLC-AXIAL;1NF,10%,50	
4 C242	2202-000796	C-CERAMIC,MLC-AXIAL;1NF,10%,50	
4 C243	2202-000796	C-CERAMIC,MLC-AXIAL;1NF,10%,50	
4 C605	2202-000796	C-CERAMIC,MLC-AXIAL;1NF,10%,50	
4 C709	2202-000806	C-CERAMIC,MLC-AXIAL;220pF,10%,50V,Y5P,TP	
4 C221	2202-000849	C-CERAMIC,MLC-AXIAL;18pF,5%,50V,CH,TP,3.	
4 C613	2301-000108	C-FILM,PEF;1.5NF,5%,50V,6.5X3.0X5.5MM,5M	
4 C622	2301-000108	C-FILM,PEF;1.5NF,5%,50V,6.5X3.0X5.5MM,5M	
4 C630	2301-000111	C-FILM,PEF;1.8NF,5%,50V,6.5X3.0X5.5MM,5M	
4 C634	2301-000111	C-FILM,PEF;1.8NF,5%,50V,6.5X3.0X5.5MM,5M	
4 C623	2301-000192	C-FILM,PEF;1NF,5%,50V,5.3X10MM	
4 C624	2301-000192	C-FILM,PEF;1NF,5%,50V,5.3X10MM	
4 C806	2301-000204	C-FILM,PEF;2.7NF,5%,50V,7.4X3.	
4 C245	2301-000224	C-FILM,PEF;22NF,5%,50V,7.4X3.9	
4 C805	2301-000224	C-FILM,PEF;22NF,5%,50V,7.4X3.9	
4 C824	2301-000224	C-FILM,PEF;22NF,5%,50V,7.4X3.9	
4 CE02	2301-000224	C-FILM,PEF;22NF,5%,50V,7.4X3.9	
4 C625	2301-000232	C-FILM,PEF;3.3NF,5%,50V,8.1X4.	
4 C626	2301-000232	C-FILM,PEF;3.3NF,5%,50V,8.1X4.	
4 CE04	2301-000232	C-FILM,PEF;3.3NF,5%,50V,8.1X4.	
4 C301	2301-000254	C-FILM,PEF;39NF,5%,50V,7.5X3.5X6.5MM,5MM	
4 C235	2301-000342	C-FILM,PEF;2.2nF,5%,50V,TP,7.4x3.9x13mm,	
4 CE03	2301-000342	C-FILM,PEF;2.2nF,5%,50V,TP,7.4x3.9x13mm,	
4 C102	2301-000383	C-FILM,PEF;10nF,5%,50V,TP,6x7x3.2mm,5mm	
4 C401	2301-000383	C-FILM,PEF;10nF,5%,50V,TP,6x7x3.2mm,5mm	
4 C621	2301-000383	C-FILM,PEF;10nF,5%,50V,TP,6x7x3.2mm,5mm	
4 C237	2301-000445	C-FILM,PEF;4.7nF,5%,50V,TP,5.5x7x3mm,5mm	
4 C414	2301-001065	C-FILM,MPPF;47NF,55,630V,TP,19	
⚠ 4 CR407S	2301-001258	C-FILM,PPF;39nF,5%,400V,TP,19.5x9x15,7.5	
⚠ 4 C415S	2301-001259	C-FILM,MPPF;100nF,5%,400V,TP,19x8x16,7.5	
4 C808	2301-001435	C-FILM,PPF;1.5nF,5%,1.2kV,TP,15x8x12.5mm	
4 C306	2305-000149	C-FILM;CF922N100VT104-J-40/105	
4 C305	2305-000285	C-FILM,MPEF;220NF,5%,100V,-,5M	
4 C213	2305-000289	C-FILM,MPEF;220NF,5%,63V,-,5MM	
4 C225	2305-000289	C-FILM,MPEF;220NF,5%,63V,-,5MM	
4 C231	2305-000289	C-FILM,MPEF;220NF,5%,63V,-,5MM	
4 C236	2305-000289	C-FILM,MPEF;220NF,5%,63V,-,5MM	
4 C214	2305-000289	C-FILM,MPEF;220NF,5%,63V,-,5MM	
4 C215	2305-000289	C-FILM,MPEF;220NF,5%,63V,-,5MM	
4 C216	2305-000289	C-FILM,MPEF;220NF,5%,63V,-,5MM	
4 C217	2305-000289	C-FILM,MPEF;220NF,5%,63V,-,5MM	
4 C404	2305-000382	C-FILM,MPEF;4.7NF,5%,400V,TP,-,5MM.	
4 C204	2305-000412	C-FILM,MPEF;470NF,5%,63V,-,5MM	
4 C218	2305-000412	C-FILM,MPEF;470NF,5%,63V,-,5MM	
4 C105	2305-000665	C-FILM;104J, 60V,5MM TAPING	
4 C206	2305-000665	C-FILM;104J, 60V,5MM TAPING	
4 C209	2305-000665	C-FILM;104J, 60V,5MM TAPING	
4 C219	2305-000665	C-FILM;104J, 60V,5MM TAPING	
4 C222	2305-000665	C-FILM;104J, 60V,5MM TAPING	
4 C232	2305-000665	C-FILM;104J, 60V,5MM TAPING	
4 C240	2305-000665	C-FILM;104J, 60V,5MM TAPING	
4 C253	2305-000665	C-FILM;104J, 60V,5MM TAPING	
4 C606	2305-000665	C-FILM;104J, 60V,5MM TAPING	
4 C618	2305-000665	C-FILM;104J, 60V,5MM TAPING	
4 C632	2305-000665	C-FILM;104J, 60V,5MM TAPING	
4 C807	2305-000665	C-FILM;104J, 60V,5MM TAPING	
4 C812	2305-000665	C-FILM;104J, 60V,5MM TAPING	
4 C244	2309-000138	C-FILM,PE-PPF;100NF,5%,50V,TP,	
4 C612	2401-000025	C-ALUMINUM;100uF,20%,16V,GP,TP,6.3x11,5	
4 CW05	2401-000025	C-ALUMINUM;100uF,20%,16V,GP,TP,6.3x11,5	
4 C822	2401-000262	C-AL;100UF,20%,160V,GP,16X25MM,5MM,	
4 C207	2401-000302	C-AL;100UF,20%,25V,GP,6X11MM,5	
4 C211	2401-000302	C-AL;100UF,20%,25V,GP,6X11MM,5	
4 C220	2401-000302	C-AL;100UF,20%,25V,GP,6X11MM,5	
4 C226	2401-000302	C-AL;100UF,20%,25V,GP,6X11MM,5	
4 C227	2401-000302	C-AL;100UF,20%,25V,GP,6X11MM,5	
4 C233	2401-000302	C-AL;100UF,20%,25V,GP,6X11MM,5	
4 C402	2401-000302	C-AL;100UF,20%,25V,GP,6X11MM,5	

Loc. No.	Code No.	Description ; Specification	Remark
4 C604	2401-000302	C-AL;100UF,20%,25V,GP,6X11MM,5	
4 C619	2401-000302	C-AL;100UF,20%,25V,GP,6X11MM,5	
4 C811	2401-000302	C-AL;100UF,20%,25V,GP,6X11MM,5	
4 C201	2401-000302	C-AL;100UF,20%,25V,GP,6X11MM,5	
4 C304	2401-000326	C-AL;100UF,20%,35V,GP,8X11MM,5	
4 C303	2401-000365	C-AL;100uF,20%,50V,WT,TP,10x12.5mm,	
4 C104	2401-000480	C-AL;10UF,20%,50V,GP,5X11MM,5M	
4 C239	2401-000480	C-AL;10UF,20%,50V,GP,5X11MM,5M	
4 C614	2401-000480	C-AL;10UF,20%,50V,GP,5X11MM,5M	
4 C607	2401-000493	C-AL;10UF,20%,50V,WT,5X11MM,5M	
4 C616	2401-000493	C-AL;10UF,20%,50V,WT,5X11MM,5M	
4 C617	2401-000493	C-AL;10UF,20%,50V,WT,5X11MM,5M	
4 C627	2401-000493	C-AL;10UF,20%,50V,WT,5X11MM,5M	
4 C809	2401-000493	C-AL;10UF,20%,50V,WT,5X11MM,5M	
4 C238	2401-000603	C-AL;1UF,20%,50V,GP,5X11MM,5MM	
4 CW01	2401-000603	C-AL;1UF,20%,50V,GP,5X11MM,5MM	
4 CW02	2401-000603	C-AL;1UF,20%,50V,GP,5X11MM,5MM	
4 CW03	2401-000603	C-AL;1UF,20%,50V,GP,5X11MM,5MM	
4 C224	2401-000660	C-ELECTROLYTIC;CE04WTAPG50V2.2	
4 C234	2401-000660	C-ELECTROLYTIC;CE04WTAPG50V2.2	
4 C412	2401-000927	C-AL;22UF,20%,250V,GP,13X20MM,	
4 C101	2401-000962	C-AL;22uF,20%,50V,GP,TP,5x11,5	
4 C212	2401-000962	C-AL;22uF,20%,50V,GP,TP,5x11,5	
4 C615	2401-001026	C-AL;3.3UF,20%,50V,GP,5X11MM,5	
4 C620	2401-001026	C-AL;3.3UF,20%,50V,GP,5X11MM,5	
4 C804	2401-001192	C-AL;33UF,20%,50V,GP,6X11MM,5MM,TP	
4 C409	2401-001397	C-AL;470UF,20%,25V,GP,10X16MM,	
4 C410	2401-001397	C-AL;470UF,20%,25V,GP,10X16MM,	
4 C633	2401-001914	C-AL;1uF,20%,50V,BP,TP,5x11,5	
4 C635	2401-001914	C-AL;1uF,20%,50V,BP,TP,5x11,5	
4 C608	2401-002075	C-AL;4.7uF,20%,50V,GP,TP,5x11,5mm	
4 C609	2401-002075	C-AL;4.7uF,20%,50V,GP,TP,5x11,5mm	
4 C610	2401-002075	C-AL;4.7uF,20%,50V,GP,TP,5x11,5mm	
4 C611	2401-002075	C-AL;4.7uF,20%,50V,GP,TP,5x11,5mm	
4 C710	2401-002075	C-AL;4.7uF,20%,50V,GP,TP,5x11,5mm	
4 C202	2401-002075	C-AL;4.7uF,20%,50V,GP,TP,5x11,5mm	
4 C817	2401-002215	C-AL;2200UF,20%,25V,(105RD)13X	
4 C407	2401-002268	C-ELEC;CE04-40/105250VT2R2-MWR	
4 C825	2401-002300	C-ELECTROLYTIC;CE04WTAPG50V47U	
4 C103	2401-002594	C-AL;220uF,20%,16V,GP,TP,8x11.5,5	
4 C813	2401-002594	C-AL;220uF,20%,16V,GP,TP,8x11.5,5	
4 C229	2401-002619	C-AL;47uF,20%,25V,GP,TP,5x11,5	
4 C810	2401-002619	C-AL;47uF,20%,25V,GP,TP,5x11,5	
4 C814	2401-003028	C-AL;100UF,20%,25V,WT,TP,6.3X1	
4 C815	2401-003028	C-AL;100UF,20%,25V,WT,TP,6.3X1	
4 C631	2401-003139	C-AL;1000UF,20%,25V,WT,TP,10*2	
4 C819	2401-003139	C-AL;1000UF,20%,25V,WT,TP,10*2	
4 L101	2701-000114	INDUCTOR-AXIAL;10UH,10%,2.5X3.	
4 L205	2701-000114	INDUCTOR-AXIAL;10UH,10%,2.5X3.	
4 L206	2701-000114	INDUCTOR-AXIAL;10UH,10%,2.5X3.	
4 L603	2701-000114	INDUCTOR-AXIAL;10UH,10%,2.5X3.	
4 LE01	2701-000114	INDUCTOR-AXIAL;10UH,10%,2.5X3.	
4 J202	2701-000114	INDUCTOR-AXIAL;10UH,10%,2.5X3.	
4 L707	2701-000127	INDUCTOR-AXIAL;15UH,10%,2.5X3.	
4 L210	2701-000142	INDUCTOR-AXIAL;1UH,10%,2.5X3.4	
4 L211	2701-000142	INDUCTOR-AXIAL;1UH,10%,2.5X3.4	
⚠ 4 L401	2701-000142	INDUCTOR-AXIAL;1UH,10%,2.5X3.4	
4 L604	2701-000142	INDUCTOR-AXIAL;1UH,10%,2.5X3.4	
4 L605	2701-000142	INDUCTOR-AXIAL;1UH,10%,2.5X3.4	
4 L212	2701-000158	INDUCTOR-AXIAL;22UH,10%,2.5X3.	
4 L209	2701-000159	INDUCTORAXIAL;22uH,10%,4.2x9.8mm	
4 L803	2701-000159	INDUCTORAXIAL;22uH,10%,4.2x9.8mm	
4 L601	2701-000169	INDUCTORAXIAL;3.9uH,10%,2.5x3.4mm	
4 L602	2701-000169	INDUCTORAXIAL;3.9uH,10%,2.5x3.4mm	
4 L202	2701-000177	INDUCTOR-AXIAL;33UH,10%,2.5X3.4MM	
4 L203	2701-000177	INDUCTOR-AXIAL;33UH,10%,2.5X3.4MM	
4 L230	2701-000177	INDUCTOR-AXIAL;33UH,10%,2.5X3.4MM	
4 L201	2701-000184	INDUCTOR-AXIAL;4.7UH,10%,2.5X3.4MM	
4 L204	2702-000142	INDUCTOR-RADIAL;22uH,5%,6x6.4mm	
4 X601	2801-000186	CRYSTAL-UNIT;18.432MHz,25ppm,28-AAM,8pF,	
⚠ 4 L403	2901-000297	FILTER-EMI ON BOARD;-,3A,-,-,3.5x5,TP,-	
4 L407	2901-000297	FILTER-EMI ON BOARD;-,3A,-,-,3.5x5,TP,-	
4 L805	2901-000297	FILTER-EMI ON BOARD;-,3A,-,-,3.5x5,TP,-	
4 R816	2901-000297	FILTER-EMI ON BOARD;-,3A,-,-,3.5x5,TP,-	
4 LE02	2901-000297	FILTER-EMI ON BOARD;-,3A,-,-,3.5x5,TP,-	
4 Z202	2903-000129	FILTER-CERAMIC;BR,4.5MHz,-,-,-,TP,-	
4 J235	3301-000287	CORE-FERRITEBEAD;AA,3.5X1.0X6.	

Loc. No.	Code No.	Description ; Specification	Remark
4 L302	3301-000287	CORE-FERRITEBEAD;AA,3.5X1.0X6.	
4 L404	3301-000287	CORE-FERRITEBEAD;AA,3.5X1.0X6.	
4 L402	3301-000287	CORE-FERRITEBEAD;AA,3.5X1.0X6.	
4 L801	3301-000287	CORE-FERRITEBEAD;AA,3.5X1.0X6.	
4 L802	3301-000287	CORE-FERRITEBEAD;AA,3.5X1.0X6.	
4 L804	3301-000287	CORE-FERRITEBEAD;AA,3.5X1.0X6.	
4 L806	3301-000287	CORE-FERRITEBEAD;AA,3.5X1.0X6.	
4 L303	3301-000287	CORE-FERRITEBEAD;AA,3.5X1.0X6.	
4 L809	3301-001223	CORE-FERRITE BEAD;AB,-,3.5X5X0.8MM,-,TP,	
⚠ 4 FD802S	3601-001163	FUSE-AXIAL LEAD;125V,7A,-,EPOXY,2.4X7.1M	
⚠ 4 FD801S	3601-001228	FUSE-AXIAL LEAD;125V,10A,FAST-ACTING,EPO	
4 F801A	3602-000114	FUSE-HOLDER;-,-,30MOHM	
4 F801B	3602-000114	FUSE-HOLDER;-,-,30MOHM	
4 C203	3812-000219	JUMPER-WIRE-SO,COPPER;TA0.6SN/52M/M(A	
4 J101	3812-000219	JUMPER-WIRE-SO,COPPER;TA0.6SN/52M/M(A	
4 J102	3812-000219	JUMPER-WIRE-SO,COPPER;TA0.6SN/52M/M(A	
4 J103	3812-000219	JUMPER-WIRE-SO,COPPER;TA0.6SN/52M/M(A	
4 J105	3812-000219	JUMPER-WIRE-SO,COPPER;TA0.6SN/52M/M(A	
4 J106	3812-000219	JUMPER-WIRE-SO,COPPER;TA0.6SN/52M/M(A	
4 J107	3812-000219	JUMPER-WIRE-SO,COPPER;TA0.6SN/52M/M(A	
4 J108	3812-000219	JUMPER-WIRE-SO,COPPER;TA0.6SN/52M/M(A	
4 J109	3812-000219	JUMPER-WIRE-SO,COPPER;TA0.6SN/52M/M(A	
4 J110	3812-000219	JUMPER-WIRE-SO,COPPER;TA0.6SN/52M/M(A	
4 J201	3812-000219	JUMPER-WIRE-SO,COPPER;TA0.6SN/52M/M(A	
4 J203	3812-000219	JUMPER-WIRE-SO,COPPER;TA0.6SN/52M/M(A	
4 J204	3812-000219	JUMPER-WIRE-SO,COPPER;TA0.6SN/52M/M(A	
4 J205	3812-000219	JUMPER-WIRE-SO,COPPER;TA0.6SN/52M/M(A	
4 J210	3812-000219	JUMPER-WIRE-SO,COPPER;TA0.6SN/52M/M(A	
4 J211	3812-000219	JUMPER-WIRE-SO,COPPER;TA0.6SN/52M/M(A	
4 J212	3812-000219	JUMPER-WIRE-SO,COPPER;TA0.6SN/52M/M(A	
4 J215	3812-000219	JUMPER-WIRE-SO,COPPER;TA0.6SN/52M/M(A	
4 J217	3812-000219	JUMPER-WIRE-SO,COPPER;TA0.6SN/52M/M(A	
4 J219	3812-000219	JUMPER-WIRE-SO,COPPER;TA0.6SN/52M/M(A	
4 J220	3812-000219	JUMPER-WIRE-SO,COPPER;TA0.6SN/52M/M(A	
4 J221	3812-000219	JUMPER-WIRE-SO,COPPER;TA0.6SN/52M/M(A	
4 J222	3812-000219	JUMPER-WIRE-SO,COPPER;TA0.6SN/52M/M(A	
4 J223	3812-000219	JUMPER-WIRE-SO,COPPER;TA0.6SN/52M/M(A	
4 J224	3812-000219	JUMPER-WIRE-SO,COPPER;TA0.6SN/52M/M(A	
4 J225	3812-000219	JUMPER-WIRE-SO,COPPER;TA0.6SN/52M/M(A	
4 J228	3812-000219	JUMPER-WIRE-SO,COPPER;TA0.6SN/52M/M(A	
4 J231	3812-000219	JUMPER-WIRE-SO,COPPER;TA0.6SN/52M/M(A	
4 J232	3812-000219	JUMPER-WIRE-SO,COPPER;TA0.6SN/52M/M(A	
4 J233	3812-000219	JUMPER-WIRE-SO,COPPER;TA0.6SN/52M/M(A	
4 J234	3812-000219	JUMPER-WIRE-SO,COPPER;TA0.6SN/52M/M(A	
4 J236	3812-000219	JUMPER-WIRE-SO,COPPER;TA0.6SN/52M/M(A	
4 J240	3812-000219	JUMPER-WIRE-SO,COPPER;TA0.6SN/52M/M(A	
4 J249	3812-000219	JUMPER-WIRE-SO,COPPER;TA0.6SN/52M/M(A	
4 J250	3812-000219	JUMPER-WIRE-SO,COPPER;TA0.6SN/52M/M(A	
4 J251	3812-000219	JUMPER-WIRE-SO,COPPER;TA0.6SN/52M/M(A	
4 J252	3812-000219	JUMPER-WIRE-SO,COPPER;TA0.6SN/52M/M(A	
4 J253	3812-000219	JUMPER-WIRE-SO,COPPER;TA0.6SN/52M/M(A	
4 J255	3812-000219	JUMPER-WIRE-SO,COPPER;TA0.6SN/52M/M(A	
4 J256	3812-000219	JUMPER-WIRE-SO,COPPER;TA0.6SN/52M/M(A	
4 J257	3812-000219	JUMPER-WIRE-SO,COPPER;TA0.6SN/52M/M(A	
4 J274	3812-000219	JUMPER-WIRE-SO,COPPER;TA0.6SN/52M/M(A	
4 J279	3812-000219	JUMPER-WIRE-SO,COPPER;TA0.6SN/52M/M(A	
4 J285	3812-000219	JUMPER-WIRE-SO,COPPER;TA0.6SN/52M/M(A	
4 J290	3812-000219	JUMPER-WIRE-SO,COPPER;TA0.6SN/52M/M(A	
4 J292	3812-000219	JUMPER-WIRE-SO,COPPER;TA0.6SN/52M/M(A	
4 J293	3812-000219	JUMPER-WIRE-SO,COPPER;TA0.6SN/52M/M(A	
4 J294	3812-000219	JUMPER-WIRE-SO,COPPER;TA0.6SN/52M/M(A	
4 J295	3812-000219	JUMPER-WIRE-SO,COPPER;TA0.6SN/52M/M(A	
4 J302	3812-000219	JUMPER-WIRE-SO,COPPER;TA0.6SN/52M/M(A	
4 J304	3812-000219	JUMPER-WIRE-SO,COPPER;TA0.6SN/52M/M(A	
4 J305	3812-000219	JUMPER-WIRE-SO,COPPER;TA0.6SN/52M/M(A	
4 J306	3812-000219	JUMPER-WIRE-SO,COPPER;TA0.6SN/52M/M(A	
4 J308	3812-000219	JUMPER-WIRE-SO,COPPER;TA0.6SN/52M/M(A	
4 J403	3812-000219	JUMPER-WIRE-SO,COPPER;TA0.6SN/52M/M(A	
4 J404	3812-000219	JUMPER-WIRE-SO,COPPER;TA0.6SN/52M/M(A	
4 J405	3812-000219	JUMPER-WIRE-SO,COPPER;TA0.6SN/52M/M(A	
4 J407	3812-000219	JUMPER-WIRE-SO,COPPER;TA0.6SN/52M/M(A	
4 J408	3812-000219	JUMPER-WIRE-SO,COPPER;TA0.6SN/52M/M(A	
4 J409	3812-000219	JUMPER-WIRE-SO,COPPER;TA0.6SN/52M/M(A	
4 J410	3812-000219	JUMPER-WIRE-SO,COPPER;TA0.6SN/52M/M(A	
4 J413	3812-000219	JUMPER-WIRE-SO,COPPER;TA0.6SN/52M/M(A	
4 J414	3812-000219	JUMPER-WIRE-SO,COPPER;TA0.6SN/52M/M(A	
4 J415	3812-000219	JUMPER-WIRE-SO,COPPER;TA0.6SN/52M/M(A	

Loc. No.	Code No.	Description ; Specification	Remark
4 J416	3812-000219	JUMPER-WIRE-SO,COPPER;TA0.6SN/52M/M(A	
4 J420	3812-000219	JUMPER-WIRE-SO,COPPER;TA0.6SN/52M/M(A	
4 J601	3812-000219	JUMPER-WIRE-SO,COPPER;TA0.6SN/52M/M(A	
4 J602	3812-000219	JUMPER-WIRE-SO,COPPER;TA0.6SN/52M/M(A	
4 J603	3812-000219	JUMPER-WIRE-SO,COPPER;TA0.6SN/52M/M(A	
4 J604	3812-000219	JUMPER-WIRE-SO,COPPER;TA0.6SN/52M/M(A	
4 J616	3812-000219	JUMPER-WIRE-SO,COPPER;TA0.6SN/52M/M(A	
4 J619	3812-000219	JUMPER-WIRE-SO,COPPER;TA0.6SN/52M/M(A	
4 J620	3812-000219	JUMPER-WIRE-SO,COPPER;TA0.6SN/52M/M(A	
4 J621	3812-000219	JUMPER-WIRE-SO,COPPER;TA0.6SN/52M/M(A	
4 J624	3812-000219	JUMPER-WIRE-SO,COPPER;TA0.6SN/52M/M(A	
4 J625	3812-000219	JUMPER-WIRE-SO,COPPER;TA0.6SN/52M/M(A	
4 J626	3812-000219	JUMPER-WIRE-SO,COPPER;TA0.6SN/52M/M(A	
4 J627	3812-000219	JUMPER-WIRE-SO,COPPER;TA0.6SN/52M/M(A	
4 J628	3812-000219	JUMPER-WIRE-SO,COPPER;TA0.6SN/52M/M(A	
4 J629	3812-000219	JUMPER-WIRE-SO,COPPER;TA0.6SN/52M/M(A	
4 J630	3812-000219	JUMPER-WIRE-SO,COPPER;TA0.6SN/52M/M(A	
4 J631	3812-000219	JUMPER-WIRE-SO,COPPER;TA0.6SN/52M/M(A	
4 J632	3812-000219	JUMPER-WIRE-SO,COPPER;TA0.6SN/52M/M(A	
4 J635	3812-000219	JUMPER-WIRE-SO,COPPER;TA0.6SN/52M/M(A	
4 J636	3812-000219	JUMPER-WIRE-SO,COPPER;TA0.6SN/52M/M(A	
4 J704	3812-000219	JUMPER-WIRE-SO,COPPER;TA0.6SN/52M/M(A	
4 J706	3812-000219	JUMPER-WIRE-SO,COPPER;TA0.6SN/52M/M(A	
4 J711	3812-000219	JUMPER-WIRE-SO,COPPER;TA0.6SN/52M/M(A	
4 J712	3812-000219	JUMPER-WIRE-SO,COPPER;TA0.6SN/52M/M(A	
4 J716	3812-000219	JUMPER-WIRE-SO,COPPER;TA0.6SN/52M/M(A	
4 J717	3812-000219	JUMPER-WIRE-SO,COPPER;TA0.6SN/52M/M(A	
4 J718	3812-000219	JUMPER-WIRE-SO,COPPER;TA0.6SN/52M/M(A	
4 J719	3812-000219	JUMPER-WIRE-SO,COPPER;TA0.6SN/52M/M(A	
4 J720	3812-000219	JUMPER-WIRE-SO,COPPER;TA0.6SN/52M/M(A	
4 J801	3812-000219	JUMPER-WIRE-SO,COPPER;TA0.6SN/52M/M(A	
4 J802	3812-000219	JUMPER-WIRE-SO,COPPER;TA0.6SN/52M/M(A	
4 J808	3812-000219	JUMPER-WIRE-SO,COPPER;TA0.6SN/52M/M(A	
4 J809	3812-000219	JUMPER-WIRE-SO,COPPER;TA0.6SN/52M/M(A	
4 J813	3812-000219	JUMPER-WIRE-SO,COPPER;TA0.6SN/52M/M(A	
4 J815	3812-000219	JUMPER-WIRE-SO,COPPER;TA0.6SN/52M/M(A	
4 J817	3812-000219	JUMPER-WIRE-SO,COPPER;TA0.6SN/52M/M(A	
4 J820	3812-000219	JUMPER-WIRE-SO,COPPER;TA0.6SN/52M/M(A	
4 J822	3812-000219	JUMPER-WIRE-SO,COPPER;TA0.6SN/52M/M(A	
4 J826	3812-000219	JUMPER-WIRE-SO,COPPER;TA0.6SN/52M/M(A	
4 J827	3812-000219	JUMPER-WIRE-SO,COPPER;TA0.6SN/52M/M(A	
4 J828	3812-000219	JUMPER-WIRE-SO,COPPER;TA0.6SN/52M/M(A	
4 J829	3812-000219	JUMPER-WIRE-SO,COPPER;TA0.6SN/52M/M(A	
4 J830	3812-000219	JUMPER-WIRE-SO,COPPER;TA0.6SN/52M/M(A	
4 J831	3812-000219	JUMPER-WIRE-SO,COPPER;TA0.6SN/52M/M(A	
4 J832	3812-000219	JUMPER-WIRE-SO,COPPER;TA0.6SN/52M/M(A	
4 J833	3812-000219	JUMPER-WIRE-SO,COPPER;TA0.6SN/52M/M(A	
4 J836	3812-000219	JUMPER-WIRE-SO,COPPER;TA0.6SN/52M/M(A	
4 J837	3812-000219	JUMPER-WIRE-SO,COPPER;TA0.6SN/52M/M(A	
4 J841	3812-000219	JUMPER-WIRE-SO,COPPER;TA0.6SN/52M/M(A	
4 J842	3812-000219	JUMPER-WIRE-SO,COPPER;TA0.6SN/52M/M(A	
⚠ 4 RY802S	3812-000219	JUMPER-WIRE-SO,COPPER;TA0.6SN/52M/M(A	
4 J803	3812-000219	JUMPER-WIRE-SO,COPPER;TA0.6SN/52M/M(A	
4 J804	3812-000219	JUMPER-WIRE-SO,COPPER;TA0.6SN/52M/M(A	
4 J805	3812-000219	JUMPER-WIRE-SO,COPPER;TA0.6SN/52M/M(A	
4 J806	3812-000219	JUMPER-WIRE-SO,COPPER;TA0.6SN/52M/M(A	
4 J411	3812-000219	JUMPER-WIRE-SO,COPPER;TA0.6SN/52M/M(A	
4 J412	3812-000219	JUMPER-WIRE-SO,COPPER;TA0.6SN/52M/M(A	
4 R218	3812-000219	JUMPER-WIRE-SO,COPPER;TA0.6SN/52M/M(A	
4 J303	3812-000219	JUMPER-WIRE-SO,COPPER;TA0.6SN/52M/M(A	
4 J254	3812-000219	JUMPER-WIRE-SO,COPPER;TA0.6SN/52M/M(A	
4 J423	3812-000219	JUMPER-WIRE-SO,COPPER;TA0.6SN/52M/M(A	
4 J424	3812-000219	JUMPER-WIRE-SO,COPPER;TA0.6SN/52M/M(A	
4 J614	3812-000219	JUMPER-WIRE-SO,COPPER;TA0.6SN/52M/M(A	
4 J615	3812-000219	JUMPER-WIRE-SO,COPPER;TA0.6SN/52M/M(A	
4 J703	3812-000219	JUMPER-WIRE-SO,COPPER;TA0.6SN/52M/M(A	
4 J705	3812-000219	JUMPER-WIRE-SO,COPPER;TA0.6SN/52M/M(A	
4 J714	3812-000219	JUMPER-WIRE-SO,COPPER;TA0.6SN/52M/M(A	
4 R715	3812-000219	JUMPER-WIRE-SO,COPPER;TA0.6SN/52M/M(A	
4 J237	3812-000219	JUMPER-WIRE-SO,COPPER;TA0.6SN/52M/M(A	
4 J229	3812-000219	JUMPER-WIRE-SO,COPPER;TA0.6SN/52M/M(A	
4 J810	3812-000219	JUMPER-WIRE-SO,COPPER;TA0.6SN/52M/M(A	
4 J811	3812-000219	JUMPER-WIRE-SO,COPPER;TA0.6SN/52M/M(A	
4 J307	3812-000219	JUMPER-WIRE-SO,COPPER;TA0.6SN/52M/M(A	
4 02VER	AA41-00656C	PCB-MAIN;CT-29K5(QUEST),FR-1,1L,C,1.6T,3	
4 EY301	6042-000002	EYELET;IDI.5,OD2,L3.1,SN,BSS3-E/EH	
4 EY302	6042-000002	EYELET;IDI.5,OD2,L3.1,SN,BSS3-E/EH	

Loc. No.	Code No.	Description ; Specification	Remark
4 EY303	6042-000002	EYELET;IDI.5,OD2,L3.1,SN,BSS3-E/EH	
4 EY304	6042-000002	EYELET;IDI.5,OD2,L3.1,SN,BSS3-E/EH	
4 EY401	6042-000002	EYELET;IDI.5,OD2,L3.1,SN,BSS3-E/EH	
4 EY402	6042-000002	EYELET;IDI.5,OD2,L3.1,SN,BSS3-E/EH	
4 EY403	6042-000002	EYELET;IDI.5,OD2,L3.1,SN,BSS3-E/EH	
4 EY404	6042-000002	EYELET;IDI.5,OD2,L3.1,SN,BSS3-E/EH	
4 EY407	6042-000002	EYELET;IDI.5,OD2,L3.1,SN,BSS3-E/EH	
4 EY408	6042-000002	EYELET;IDI.5,OD2,L3.1,SN,BSS3-E/EH	
4 EY409	6042-000002	EYELET;IDI.5,OD2,L3.1,SN,BSS3-E/EH	
4 EY410	6042-000002	EYELET;IDI.5,OD2,L3.1,SN,BSS3-E/EH	
4 EY411	6042-000002	EYELET;IDI.5,OD2,L3.1,SN,BSS3-E/EH	
4 EY412	6042-000002	EYELET;IDI.5,OD2,L3.1,SN,BSS3-E/EH	
4 EY413	6042-000002	EYELET;IDI.5,OD2,L3.1,SN,BSS3-E/EH	
4 EY414	6042-000002	EYELET;IDI.5,OD2,L3.1,SN,BSS3-E/EH	
4 EY419	6042-000002	EYELET;IDI.5,OD2,L3.1,SN,BSS3-E/EH	
4 EY420	6042-000002	EYELET;IDI.5,OD2,L3.1,SN,BSS3-E/EH	
4 EY421	6042-000002	EYELET;IDI.5,OD2,L3.1,SN,BSS3-E/EH	
4 EY423	6042-000002	EYELET;IDI.5,OD2,L3.1,SN,BSS3-E/EH	
4 EY424	6042-000002	EYELET;IDI.5,OD2,L3.1,SN,BSS3-E/EH	
4 EY425	6042-000002	EYELET;IDI.5,OD2,L3.1,SN,BSS3-E/EH	
4 EY426	6042-000002	EYELET;IDI.5,OD2,L3.1,SN,BSS3-E/EH	
4 EY427	6042-000002	EYELET;IDI.5,OD2,L3.1,SN,BSS3-E/EH	
4 EY428	6042-000002	EYELET;IDI.5,OD2,L3.1,SN,BSS3-E/EH	
4 EY429	6042-000002	EYELET;IDI.5,OD2,L3.1,SN,BSS3-E/EH	
4 EY430	6042-000002	EYELET;IDI.5,OD2,L3.1,SN,BSS3-E/EH	
4 EY431	6042-000002	EYELET;IDI.5,OD2,L3.1,SN,BSS3-E/EH	
4 EY432	6042-000002	EYELET;IDI.5,OD2,L3.1,SN,BSS3-E/EH	
4 EY433	6042-000002	EYELET;IDI.5,OD2,L3.1,SN,BSS3-E/EH	
4 EY434	6042-000002	EYELET;IDI.5,OD2,L3.1,SN,BSS3-E/EH	
4 EY435	6042-000002	EYELET;IDI.5,OD2,L3.1,SN,BSS3-E/EH	
4 EY436	6042-000002	EYELET;IDI.5,OD2,L3.1,SN,BSS3-E/EH	
4 EY437	6042-000002	EYELET;IDI.5,OD2,L3.1,SN,BSS3-E/EH	
4 EY438	6042-000002	EYELET;IDI.5,OD2,L3.1,SN,BSS3-E/EH	
4 EY439	6042-000002	EYELET;IDI.5,OD2,L3.1,SN,BSS3-E/EH	
4 EY601	6042-000002	EYELET;IDI.5,OD2,L3.1,SN,BSS3-E/EH	
4 EY602	6042-000002	EYELET;IDI.5,OD2,L3.1,SN,BSS3-E/EH	
4 EY603	6042-000002	EYELET;IDI.5,OD2,L3.1,SN,BSS3-E/EH	
4 EY604	6042-000002	EYELET;IDI.5,OD2,L3.1,SN,BSS3-E/EH	
4 EY801	6042-000002	EYELET;IDI.5,OD2,L3.1,SN,BSS3-E/EH	
4 EY802	6042-000002	EYELET;IDI.5,OD2,L3.1,SN,BSS3-E/EH	
4 EY807	6042-000002	EYELET;IDI.5,OD2,L3.1,SN,BSS3-E/EH	
4 EY808	6042-000002	EYELET;IDI.5,OD2,L3.1,SN,BSS3-E/EH	
4 EY809	6042-000002	EYELET;IDI.5,OD2,L3.1,SN,BSS3-E/EH	
4 EY810	6042-000002	EYELET;IDI.5,OD2,L3.1,SN,BSS3-E/EH	
4 EY811	6042-000002	EYELET;IDI.5,OD2,L3.1,SN,BSS3-E/EH	
4 EY814	6042-000002	EYELET;IDI.5,OD2,L3.1,SN,BSS3-E/EH	
4 EY816	6042-000002	EYELET;IDI.5,OD2,L3.1,SN,BSS3-E/EH	
4 EY824	6042-000002	EYELET;IDI.5,OD2,L3.1,SN,BSS3-E/EH	
4 EY825	6042-000002	EYELET;IDI.5,OD2,L3.1,SN,BSS3-E/EH	
4 EY826	6042-000002	EYELET;IDI.5,OD2,L3.1,SN,BSS3-E/EH	
4 EY827	6042-000002	EYELET;IDI.5,OD2,L3.1,SN,BSS3-E/EH	
4 EY830	6042-000002	EYELET;IDI.5,OD2,L3.1,SN,BSS3-E/EH	
4 EY831	6042-000002	EYELET;IDI.5,OD2,L3.1,SN,BSS3-E/EH	
4 EY832	6042-000002	EYELET;IDI.5,OD2,L3.1,SN,BSS3-E/EH	
4 EY833	6042-000002	EYELET;IDI.5,OD2,L3.1,SN,BSS3-E/EH	
4 EY838	6042-000002	EYELET;IDI.5,OD2,L3.1,SN,BSS3-E/EH	
4 EY839	6042-000002	EYELET;IDI.5,OD2,L3.1,SN,BSS3-E/EH	
4 EY840	6042-000002	EYELET;IDI.5,OD2,L3.1,SN,BSS3-E/EH	
4 EY841	6042-000002	EYELET;IDI.5,OD2,L3.1,SN,BSS3-E/EH	
4 EY842	6042-000002	EYELET;IDI.5,OD2,L3.1,SN,BSS3-E/EH	
4 EY843	6042-000002	EYELET;IDI.5,OD2,L3.1,SN,BSS3-E/EH	
4 EY844	6042-000002	EYELET;IDI.5,OD2,L3.1,SN,BSS3-E/EH	
4 EY845	6042-000002	EYELET;IDI.5,OD2,L3.1,SN,BSS3-E/EH	
4 EY848	6042-000002	EYELET;IDI.5,OD2,L3.1,SN,BSS3-E/EH	
4 EY850	6042-000002	EYELET;IDI.5,OD2,L3.1,SN,BSS3-E/EH	
4 EY851	6042-000002	EYELET;IDI.5,OD2,L3.1,SN,BSS3-E/EH	
4 EY855	6042-000002	EYELET;IDI.5,OD2,L3.1,SN,BSS3-E/EH	
4 EY856	6042-000002	EYELET;IDI.5,OD2,L3.1,SN,BSS3-E/EH	
4 EY857	6042-000002	EYELET;IDI.5,OD2,L3.1,SN,BSS3-E/EH	
4 EY858	6042-000002	EYELET;IDI.5,OD2,L3.1,SN,BSS3-E/EH	
4 EY862	6042-000002	EYELET;IDI.5,OD2,L3.1,SN,BSS3-E/EH	
4 EY863	6042-000002	EYELET;IDI.5,OD2,L3.1,SN,BSS3-E/EH	
4 EY864	6042-000002	EYELET;IDI.5,OD2,L3.1,SN,BSS3-E/EH	
4 EY865	6042-000002	EYELET;IDI.5,OD2,L3.1,SN,BSS3-E/EH	
4 EY866	6042-000002	EYELET;IDI.5,OD2,L3.1,SN,BSS3-E/EH	
4 EY440	6042-000002	EYELET;IDI.5,OD2,L3.1,SN,BSS3-E/EH	
4 EY441	6042-000002	EYELET;IDI.5,OD2,L3.1,SN,BSS3-E/EH	

Loc. No.		Code No.	Description ; Specification	Remark
4	EY701	6042-000002	EYELET;IDI.5,OD2,L3.1,SN,BSS3-E/EH	
4	EY702	6042-000002	EYELET;IDI.5,OD2,L3.1,SN,BSS3-E/EH	
4	EY703	6042-000002	EYELET;IDI.5,OD2,L3.1,SN,BSS3-E/EH	
4	EY704	6042-000002	EYELET;IDI.5,OD2,L3.1,SN,BSS3-E/EH	
4	EY803	6042-000002	EYELET;IDI.5,OD2,L3.1,SN,BSS3-E/EH	
4	EY804	6042-000002	EYELET;IDI.5,OD2,L3.1,SN,BSS3-E/EH	
4	EY805	6042-000002	EYELET;IDI.5,OD2,L3.1,SN,BSS3-E/EH	
4	EY806	6042-000002	EYELET;IDI.5,OD2,L3.1,SN,BSS3-E/EH	
4	EY812	6042-000002	EYELET;IDI.5,OD2,L3.1,SN,BSS3-E/EH	
4	EY813	6042-000002	EYELET;IDI.5,OD2,L3.1,SN,BSS3-E/EH	
4	EY818	6042-000002	EYELET;IDI.5,OD2,L3.1,SN,BSS3-E/EH	
4	EY819	6042-000002	EYELET;IDI.5,OD2,L3.1,SN,BSS3-E/EH	
4	EY820	6042-000002	EYELET;IDI.5,OD2,L3.1,SN,BSS3-E/EH	
4	EY821	6042-000002	EYELET;IDI.5,OD2,L3.1,SN,BSS3-E/EH	
4	EY822	6042-000002	EYELET;IDI.5,OD2,L3.1,SN,BSS3-E/EH	
4	EY823	6042-000002	EYELET;IDI.5,OD2,L3.1,SN,BSS3-E/EH	
4	EY834	6042-000002	EYELET;IDI.5,OD2,L3.1,SN,BSS3-E/EH	
4	EY835	6042-000002	EYELET;IDI.5,OD2,L3.1,SN,BSS3-E/EH	
4	EY836	6042-000002	EYELET;IDI.5,OD2,L3.1,SN,BSS3-E/EH	
4	EY859	6042-000002	EYELET;IDI.5,OD2,L3.1,SN,BSS3-E/EH	
4	EY860	6042-000002	EYELET;IDI.5,OD2,L3.1,SN,BSS3-E/EH	
4	EL401	6042-000001	EYELET;ID2.2,OD2.7,L3.1,SN,BSS3-E/EH	
4	EL402	6042-000001	EYELET;ID2.2,OD2.7,L3.1,SN,BSS3-E/EH	
4	EL403	6042-000001	EYELET;ID2.2,OD2.7,L3.1,SN,BSS3-E/EH	
4	EL805	6042-000001	EYELET;ID2.2,OD2.7,L3.1,SN,BSS3-E/EH	
4	EL806	6042-000001	EYELET;ID2.2,OD2.7,L3.1,SN,BSS3-E/EH	
4	EL807	6042-000001	EYELET;ID2.2,OD2.7,L3.1,SN,BSS3-E/EH	
4	EL808	6042-000001	EYELET;ID2.2,OD2.7,L3.1,SN,BSS3-E/EH	
4	EL404	6042-000001	EYELET;ID2.2,OD2.7,L3.1,SN,BSS3-E/EH	
4	GT102	AA60-40014A	PIN-GT,ASSY;1P,-,-,AUTO	
4	GT404	AA60-40014A	PIN-GT,ASSY;1P,-,-,AUTO	
4	GT801	AA60-40014A	PIN-GT,ASSY;1P,-,-,AUTO	
4	GT802	AA60-40014A	PIN-GT,ASSY;1P,-,-,AUTO	
4	GT803	AA60-40014A	PIN-GT,ASSY;1P,-,-,AUTO	
4	GT804	AA60-40014A	PIN-GT,ASSY;1P,-,-,AUTO	
4	GT805	AA60-40014A	PIN-GT,ASSY;1P,-,-,AUTO	
4	GT806	AA60-40014A	PIN-GT,ASSY;1P,-,-,AUTO	
4	L/LINE	AA68-01544A	LABEL;LINE,ALL MDL COMMON	
4	R418	2008-000266	R-FUSIBLE(S);1OHM,5%,2W,AF,TP,	
4	CE01	2401-002597	C-AL;220uF,20%,35V,GP,TP,10x12.5,5	
4	DE03	0403-001325	DIODE-ZENER;MTZJ15C,14.35-15.09V,500mW,D	
4	RE02	2001-001178	R-CARBON(S);680OHM,5%,1/2W,AA,	
4	RE05	2004-001397	R-METAL(S);4.7KOHM,1%,1/2W,AA,	
4	RE09	2008-001018	R-FUSIBLE(S);0.47OHM,10%,2W,AF	
4	RE10	2004-004048	R-METAL(S);3.9Kohm,1%,1/2W,AA,TP,2.5x6.5	
4	R902	2001-000241	R-CARBON;1.5KOHM,5%,1/8W,AA,TP	
4	R905	2001-000241	R-CARBON;1.5KOHM,5%,1/8W,AA,TP	
4	SW202	3404-000244	SWITCH-TACT;15V,20MA,90-170GF,	
4	SW203	3404-000244	SWITCH-TACT;15V,20MA,90-170GF,	
4	SW204	3404-000244	SWITCH-TACT;15V,20MA,90-170GF,	
4	SW205	3404-000244	SWITCH-TACT;15V,20MA,90-170GF,	
4	SW206	3404-000244	SWITCH-TACT;15V,20MA,90-170GF,	
3	X201	2801-004033	CRYSTAL-UNIT;12MHZ,30PPM,28-AAM,30PF,30O	
3	CN301	AA60-40012D	PIN-GT,ASSY;4P,T1.6,6-12.5-14MM,NYLON66	
2	A/CRT	AA96-01015A	ASSY MISC P-CRT;TXM2792FX,K57A	
3	DF01	0401-000005	DIODE;1N4148,100V,300mA,1V,8nS,TAPING	
3	DF04	0401-000005	DIODE;1N4148,100V,300mA,1V,8nS,TAPING	
3	DG01	0401-000005	DIODE;1N4148,100V,300mA,1V,8nS,TAPING	
3	D504	0402-000254	DIODE-RECTIFIER;RGP10J,600V,1A,DO-41	
3	D514	0402-001105	DIODE-RECTIFIER;ERB43-04SV1,400V,1.0A,-,	
3	D515	0402-001105	DIODE-RECTIFIER;ERB43-04SV1,400V,1.0A,-,	
3	D516	0402-001105	DIODE-RECTIFIER;ERB43-04SV1,400V,1.0A,-,	
3	D517	0402-001105	DIODE-RECTIFIER;ERB43-04SV1,400V,1.0A,-,	
3	D518	0402-001105	DIODE-RECTIFIER;ERB43-04SV1,400V,1.0A,-,	
3	D519	0402-001105	DIODE-RECTIFIER;ERB43-04SV1,400V,1.0A,-,	
3	DF02	0402-001105	DIODE-RECTIFIER;ERB43-04SV1,400V,1.0A,-,	
3	DF03	0402-001105	DIODE-RECTIFIER;ERB43-04SV1,400V,1.0A,-,	
3	DZF01	0403-001039	DIODE ZENER;MA2560,56V,52-60V,1W,DO-41,T	
3	DZF02	0403-001039	DIODE ZENER;MA2560,56V,52-60V,1W,DO-41,T	
3	DZ501	0403-001211	DIODE-ZENER;MTZJ12B,11.44-12.03V,500MW,D	
3	DZ502	0403-001211	DIODE-ZENER;MTZJ12B,11.44-12.03V,500MW,D	
3	DZ503	0403-001211	DIODE-ZENER;MTZJ12B,11.44-12.03V,500MW,D	
3	DZ504	0403-001211	DIODE-ZENER;MTZJ12B,11.44-12.03V,500MW,D	
3	DZ507	0403-001325	DIODE-ZENER;MTZJ15C,14.35-15.09V,500mW,D	
3	DZG501	0403-001328	DIODE-ZENER;MTZJ22A,20.15-21.20V,500mW,D	
3	QG01	0501-000283	TRANSISTOR;KSA539-Y(TAPG)/YTAM	
3	QF03	0501-000369	TRANSISTOR;KSC2331-Y(TAPG)	

Loc. No.		Code No.	Description ; Specification	Remark
3	QF01	0501-000389	TRANSISTOR;KSC815-Y(TAPG)/YTAM	
3	QF02	0501-000389	TRANSISTOR;KSC815-Y(TAPG)/YTAM	
3	RF09	2001-000221	R-CARBON;1.2KOHM,5%,1/8W,AA,TP	
3	RF12	2001-000221	R-CARBON;1.2KOHM,5%,1/8W,AA,TP	
3	RF10	2001-000241	R-CARBON;1.5KOHM,5%,1/8W,AA,TP	
3	RF11	2001-000241	R-CARBON;1.5KOHM,5%,1/8W,AA,TP	
3	RF08	2001-000313	R-CARBON;11KOHM,5%,1/8W,AA,TP,	
3	RF26	2001-000313	R-CARBON;11KOHM,5%,1/8W,AA,TP,	
3	RF03	2001-000362	R-CARBON;150OHM,5%,1/8W,AA,TP,	
3	RF05	2001-000362	R-CARBON;150OHM,5%,1/8W,AA,TP,	
3	RF02	2001-000405	R-CARBON;180OHM,5%,1/8W,AA,TP,	
3	RF01	2001-000449	R-CARBON;2.2KOHM,5%,1/8W,AA,TP	
3	RF04	2001-000449	R-CARBON;2.2KOHM,5%,1/8W,AA,TP	
3	R509	2001-000490	R-CARBON;200OHM,5%,1/8W,AA,TP,	
3	R511	2001-000490	R-CARBON;200OHM,5%,1/8W,AA,TP,	
3	R517	2001-000490	R-CARBON;200OHM,5%,1/8W,AA,TP,	
3	RF07	2001-000904	R-CARBON;620OHM,5%,1/8W,AA,TP,1.8X3.2MM	
3	R548	2001-001062	R-CARBON(S);10MOHM,5%,1/2W,AA,	
3	RF14	2001-001071	R-CARBON(S);12KOHM,5%,1/2W,AA,	
3	RG06	2001-001100	R-CARBON(S);2.7OHM,5%,1/2W,AA,	
3	RG07	2001-001100	R-CARBON(S);2.7OHM,5%,1/2W,AA,	
3	RF17	2001-001100	R-CARBON(S);2.7OHM,5%,1/2W,AA,	
3	RF15	2001-001100	R-CARBON(S);2.7OHM,5%,1/2W,AA,	
3	RF06	2001-001107	R-CARBON(S);220OHM,5%,1/2W,AA,	
3	RG05	2001-001163	R-CARBON(S);560OHM,5%,1/2W,AA,	
3	RG08	2001-001163	R-CARBON(S);560OHM,5%,1/2W,AA,	
3	RF13	2001-001179	R-CARBON(S);68KOHM,5%,1/2W,AA,	
3	RF16	2001-001179	R-CARBON(S);68KOHM,5%,1/2W,AA,	
3	R512	2002-001008	R-COMPOSITION;1.8KOHM,10%1/2W,AA,TP,3.7	
3	R515	2002-001008	R-COMPOSITION;1.8KOHM,10%1/2W,AA,TP,3.7	
3	R518	2002-001008	R-COMPOSITION;1.8KOHM,10%1/2W,AA,TP,3.7	
3	R521	2002-001009	R-COMPOSITION;2.7KOHM,10%,1/2W,AA,TP,3.7	
3	RF18	2003-000458	R-METALOXIDE(S);100OHM,5%,2W,A	
3	RF23	2003-000746	R-METALOXIDE(S);56OHM,5%,2W,AD	
3	RF24	2003-000746	R-METALOXIDE(S);56OHM,5%,2W,AD	
3	RF25	2003-002009	R-METALOXIDE(S);390OHM,5%,2W,A	
3	RF19	2003-001023	R-METALOXIDE(S);120OHM,5%,2W,A	
3	RF20	2003-002214	R-METALOXIDE(S);680ohm,5%,2W,AG,TP,3x19	
3	RF21	2003-002214	R-METALOXIDE(S);680ohm,5%,2W,AG,TP,3x19	
3	RF22	2003-002214	R-METALOXIDE(S);680ohm,5%,2W,AG,TP,3x19	
3	RG01	2004-001397	R-METAL(S);4.7KOHM,1%,1/2W,AA,	
3	RG03	2004-001987	R-METAL;4.3KOHM,1%,1/2W,AA,TP,	
3	RG02	2004-002022	R-METAL,FILM;RM1/2T51K-F	
3	RG04	2004-002022	R-METAL,FILM;RM1/2T51K-F	
3	R523	2008-001018	R-FUSIBLE(S);0.47OHM,10%,2W,AF	
3	R519	2008-000299	R-FUSIBLE;RF2RT470-J	
3	R522	2008-001129	R-FUSIBLE(S),1.5OHM,5%1/2W,AF,TP,2.5	
3	CF01	2201-000370	C-CERAMIC,DISC;220PF,10%,50V,Y5P,TP	
3	CF03	2201-000376	C-CERAMIC,DISC;220PF,5%,50V,SL,4X4MM,5MM	
3	CF06	2201-000516	C-CERAMIC,DISC;4.7NF,+100-0%,5	
3	CF08	2201-000604	C-CERAMIC,DISC;56PF,+100-0%,50	
3	CF04	2201-000653	C-CERAMIC,DISC;68PF,5%,50V,SL,4.0X3.5MM,	
3	C509	2201-000723	C-CERAMIC,DISC;4.7nF,20%,3KV,Y5U,TP,16x5	
3	C512	2301-000192	C-FILM,PEF;1NF,5%,50V,5.3X10MM	
3	CF02	2301-000192	C-FILM,PEF;1NF,5%,50V,5.3X10MM	
3	CF05	2301-000261	C-FILM,PEF;4.7NF,5%,100V,10.5X	
3	CG02	2305-000149	C-FILM;CF922N100VT104-J-40/105	
3	CF07	2305-000704	C-M,POLYESTER;CFS922MTAPG250V1	
3	C514	2401-000430	C-ELECTROLYTIC;CE04WTAPG250V10	
3	CG03	2401-000493	C-AL;10UF,20%,50V,WT,5X11MM,5M	
3	CF14	2401-000832	C-AL;220UF,20%,25V,GP,8X11MM,5	
3	CG01	2401-000832	C-AL;220UF,20%,25V,GP,8X11MM,5	
3	CG04	2401-000832	C-AL;220UF,20%,25V,GP,8X11MM,5	
3	CF11	2401-000927	C-AL;22UF,20%,250V,GP,13X20MM,	
3	C510	2401-001232	C-AL;4.7UF,20%,250V,GP,10X12.5	
3	C520	2401-001232	C-AL;4.7UF,20%,250V,GP,10X12.5	
3	C515	2401-001563	C-AL;47uF,20%,400V,GP,TP,16x25mm,7.5	
3	CF10	2401-000025	C-ALUMINUM;100uF,20%,16V,GP,TP.6.3x11,5	
3	CF12	2401-000025	C-ALUMINUM;100uF,20%,16V,GP,TP.6.3x11,5	
3	L501	2701-000112	INDUCTOR-AXIAL;100UH,10%,2.8X7	
3	L508	2701-000112	INDUCTOR-AXIAL;100UH,10%,2.8X7	
3	LF02	2701-000112	INDUCTOR-AXIAL;100UH,10%,2.8X7	
3	L504	2701-000115	INDUCTOR-AXIAL;10UH,10%,2.8X7M	
3	L507	2701-000115	INDUCTOR-AXIAL;10UH,10%,2.8X7M	
3	L509	2901-000297	FILTER-EMI ON BOARD;-,3A,-,-,3.5x5,TP,-	
3	LF04	2901-000297	FILTER-EMI ON BOARD;-,3A,-,-,3.5x5,TP,-	
3	LF05	2901-000297	FILTER-EMI ON BOARD;-,3A,-,-,3.5x5,TP,-	

Loc. No.	Code No.	Description ; Specification	Remark
3 LF06	2901-000297	FILTER-EMI ON BOARD;-,3A,-,-,3.5x5,TP,-	
3 LF07	2901-000297	FILTER-EMI ON BOARD;-,3A,-,-,3.5x5,TP,-	
3 LF01	3301-000287	CORE-FERRITEBEAD;AA,3.5X1.0X6.	
3 J501	3812-000219	JUMPER-WIRE-SO,COPPER;TA0.6SN/52M/M(A	
3 J503	3812-000219	JUMPER-WIRE-SO,COPPER;TA0.6SN/52M/M(A	
3 J508	3812-000219	JUMPER-WIRE-SO,COPPER;TA0.6SN/52M/M(A	
3 J509	3812-000219	JUMPER-WIRE-SO,COPPER;TA0.6SN/52M/M(A	
3 J510	3812-000219	JUMPER-WIRE-SO,COPPER;TA0.6SN/52M/M(A	
3 J511	3812-000219	JUMPER-WIRE-SO,COPPER;TA0.6SN/52M/M(A	
3 J512	3812-000219	JUMPER-WIRE-SO,COPPER;TA0.6SN/52M/M(A	
3 J513	3812-000219	JUMPER-WIRE-SO,COPPER;TA0.6SN/52M/M(A	
3 J515	3812-000219	JUMPER-WIRE-SO,COPPER;TA0.6SN/52M/M(A	
3 J516	3812-000219	JUMPER-WIRE-SO,COPPER;TA0.6SN/52M/M(A	
3 J521	3812-000219	JUMPER-WIRE-SO,COPPER;TA0.6SN/52M/M(A	
3 J522	3812-000219	JUMPER-WIRE-SO,COPPER;TA0.6SN/52M/M(A	
3 J523	3812-000219	JUMPER-WIRE-SO,COPPER;TA0.6SN/52M/M(A	
3 J524	3812-000219	JUMPER-WIRE-SO,COPPER;TA0.6SN/52M/M(A	
3 J529	3812-000219	JUMPER-WIRE-SO,COPPER;TA0.6SN/52M/M(A	
3 J530	3812-000219	JUMPER-WIRE-SO,COPPER;TA0.6SN/52M/M(A	
3 JF02	3812-000219	JUMPER-WIRE-SO,COPPER;TA0.6SN/52M/M(A	
3 JF06	3812-000219	JUMPER-WIRE-SO,COPPER;TA0.6SN/52M/M(A	
3 JG01	3812-000219	JUMPER-WIRE-SO,COPPER;TA0.6SN/52M/M(A	
3 JG02	3812-000219	JUMPER-WIRE-SO,COPPER;TA0.6SN/52M/M(A	
3 R502	3812-000219	JUMPER-WIRE-SO,COPPER;TA0.6SN/52M/M(A	
3 R503	3812-000219	JUMPER-WIRE-SO,COPPER;TA0.6SN/52M/M(A	
3 R504	3812-000219	JUMPER-WIRE-SO,COPPER;TA0.6SN/52M/M(A	
3 R510	3812-000219	JUMPER-WIRE-SO,COPPER;TA0.6SN/52M/M(A	
3 01VER	AA41-00683B	PCB-CRT;CT-29M6V/CT-29U1,FR-1,1L,B,1.6T,	
3 EY501	6042-000002	EYELET;IDI.5,OD2,L3.1,SN,BSS3-E/EH	
3 EL81	6042-000001	EYELET;ID2.2,OD2.7,L3.1,SN,BSS3-E/EH	
3 EL82	6042-000001	EYELET;ID2.2,OD2.7,L3.1,SN,BSS3-E/EH	
3 EL83	6042-000001	EYELET;ID2.2,OD2.7,L3.1,SN,BSS3-E/EH	
3 EL84	6042-000001	EYELET;ID2.2,OD2.7,L3.1,SN,BSS3-E/EH	
3 EL85	6042-000001	EYELET;ID2.2,OD2.7,L3.1,SN,BSS3-E/EH	
3 EL86	6042-000001	EYELET;ID2.2,OD2.7,L3.1,SN,BSS3-E/EH	
3 EL87	6042-000001	EYELET;ID2.2,OD2.7,L3.1,SN,BSS3-E/EH	
3 EL88	6042-000001	EYELET;ID2.2,OD2.7,L3.1,SN,BSS3-E/EH	
3 EL89	6042-000001	EYELET;ID2.2,OD2.7,L3.1,SN,BSS3-E/EH	
3 EL90	6042-000001	EYELET;ID2.2,OD2.7,L3.1,SN,BSS3-E/EH	
3 EL93	6042-000001	EYELET;ID2.2,OD2.7,L3.1,SN,BSS3-E/EH	
3 EL94	6042-000001	EYELET;ID2.2,OD2.7,L3.1,SN,BSS3-E/EH	
3 EL95	6042-000001	EYELET;ID2.2,OD2.7,L3.1,SN,BSS3-E/EH	
3 EL96	6042-000001	EYELET;ID2.2,OD2.7,L3.1,SN,BSS3-E/EH	
3 EL79	6042-000001	EYELET;ID2.2,OD2.7,L3.1,SN,BSS3-E/EH	
3 EL80	6042-000001	EYELET;ID2.2,OD2.7,L3.1,SN,BSS3-E/EH	
3 GT504	AA60-40014A	PIN-GT,ASSY;1P,-,-,AUTO	
3 GT505	AA60-40014A	PIN-GT,ASSY;1P,-,-,AUTO	
3 GT506	AA60-40014A	PIN-GT,ASSY;1P,-,-,AUTO	
3 ICG01	1201-000191	IC;MC4558C	
3 VA999	3704-000114	SOCKET CRT;14P,29.1,35.5SN,1SH09S/BK	
3 JA501	3722-001503	JACK-PIN;1P,1PI,NI,RED,SCR-JACK	
3 CN502E	AA39-20027B	LEAD CONNECTOR-ASSY;,6P,67096-006,S,400,	
3 CN501E	AA39-20031D	LEAD CONNECTOR-ASSY;,9P,67096-009,S,500,	
3 QF04	AA96-00243L	ASSY H/S;-,CRT,AA62-00045A,2SC2344,HERC	
4	0205-000129	GREASE-SILICON;SC102,JAPAN	
4	0502-000153	TR-POWER;2SC2344-D,NPN,180V,16	
4	6003-000335	SCREW-TAPTITE;RH,+,2S,M3,L8,ZPC(YEL),SWR	
4	AA62-00045A	HEAT SINK-PS;-,-,T1.0,-,-,DREAM,-,-,-,-,	
3 QF05	AA96-00243M	ASSY H/S;-,AMP,AA62-00045A,2SA1011,HERC	
4	0205-000129	GREASE-SILICON;SC102,JAPAN	
4	0502-000131	TR-POWER;2SA1011-D,PNP,-180V,-	
4	6003-000335	SCREW-TAPTITE;RH,+,2S,M3,L8,ZPC(YEL),SWR	
4	AA62-00045A	HEAT SINK-PS;-,-,T1.0,-,-,DREAM,-,-,-,-,	
3 IC501	AA96-50311E	ASSY-H/S;-,-,AA62-30175D,TDA6108Q,-	
4	1201-001330	IC-VIDEO;TDA6108JF,ZSIP,9,SINGLE,-	
4	6003-000334	SCREW-TAPTITE;RH,+,2S,M3,L6,ZP	
4	AA62-30175D	HEATSINK-PS;-,SECC,T1.0,-,33X15X30FT-2	
3 WG2	AA39-20010B	LEAD-CONNECTOR,ASSY;-,YFH800-01,500MM,1P	
3 CN501A	3711-002648	POST-HEADER;67094-009(AUTO)	
3 CN502A	3711-002645	POST-HEADER;67094-006(AUTO)	
3 CNG01	3711-002643	POST-HEADER;YW025-04(AUTO)	
3 CNF01	3711-002642	POST-HEADER;67094-003(AUTO)	
3 QG02	0502-000244	TR-POWER;KSA940,PNP,-150V,-150	
3 QG03	0502-001007	TR-POWER;KSC2073-H2,NPN,150V,1	
3 BAND	AA63-10002A	BAND-TIE;-,NYLON66V2,-,-,L100,NTR,-,-	
3 C516	2301-000213	C-FILM,PEF;220NF,5%,250V,21.5X	
3 C507	2301-000213	C-FILM,PEF;220NF,5%,250V,21.5X	

Loc. No.	Code No.	Description ; Specification	Remark
2 S/FELT	AA63-00362A	FELT;W25XL8,T2.0,FELT,BLK.	

ASSY COVER FRONT

1 A/CFRONT	AA90-03190X	ASSY COVER FRONT;CL29K5MQKX/XAX	
2 SPK+CF	6006-001095	SCREW-ASS'Y TAPT;WP,BH,+,M4,L12,ZPC(YEL)	
2 CRT+CF	AA60-10050V	SCREW-ASSY;WC,HH,+,M6,L30,SWRCH18A,ZPC(S	
2 AV+CF	6003-001268	SCREW-TAPTITE;TH,+,B,M4.0,L12.0,ZPC(YEL)	
2 F/C	AA96-00906S	ASSY COVER P-FRONT;29K5,XAX,HIPS HB,G430	
3 TAPE	0203-001085	TAPE-DOUBLE FACE;#4929,T0.64,W12,-,BLK	
3 KC+CF	6003-001026	SCREW-TAPTITE;RH,+,B,M4,L15,ZPC(BLK),SWR	
3 WR+CF	6003-001026	SCREW-TAPTITE;RH,+,B,M4,L15,ZPC(BLK),SWR	
3 MASK	AA60-00091G	SPACER-FELT;-,FELT,200X10,-,-,BLK,T0.5,-	
3 SPRING	AA61-60003J	SPRING ETC-CS;-,SUS304,-,-,OD6,N7,OD6,-,	
3 WR	AA64-02632A	WINDOW-RMC,LED;29K5,PC,CLR	
3 KP	AA64-02629A	KNOB-POWER;29K5,ABS HB,G3676,SVM-3012	
3 KC	AA64-02635A	KNOB-CONTROL;29K5,ABS HB,G3676,SVM-3012	
3 CF	AA64-03418B	CABINET FRONT;29K5,HIPS,HB,G4309,SV012 K	
2 AHS	AA91-00507A	ASSY HOLDER SPK;-,-,8OHM/15W,-,ASSY HOLD	
2 L/QMS	AA68-02391A	LABEL-QMS;ART-PAPER(90)G,110x24mm	
2 INLAV	AA64-01506C	INLAY-AV;29K3,PVC-SHEET,T0.3,-,P/GRAY,-	
2 BADGE	AA64-70117B	BADGE-BRAND;-,AL,-,-,L65,R2000,SILVER,SS	
2 SP	AA61-40113A	STOPPER-PCB;-,ABS,HB,NTR.	
2 CWFCR	AA65-00011C	CLAMP-WIRE;ALL MODEL,NYLON 66,V2,NTR,25M	
2 CWFCL	AA65-00011B	CLAMP-WIRE;ALL MODEL,NYLON 66,V2,NTR,15M	
2 APAVS	AA96-01156A	ASSY MISC,A/V SIDE,CFT2791KX/SMS;K57A	
3 R701	2001-000028	R-CARBON(S);100OHM,5%,1/2W,AB,	
3 R702	2001-000028	R-CARBON(S);100OHM,5%,1/2W,AB,	
3 C701	2202-000121	C-CERAMIC,MLC-AXIAL;100pF,10%,50V,Y5P,TP	
3 C702	2202-000121	C-CERAMIC,MLC-AXIAL;100pF,10%,50V,Y5P,TP	
3 C703	2202-000231	C-CERAMIC,MLC-AXIAL;330PF,10%,50V,Y5P,3.	
3 C704	2202-000231	C-CERAMIC,MLC-AXIAL;330PF,10%,50V,Y5P,3.	
3 C705	2401-002009	C-AL;100UF,20%,16V,GP,TP,6.3X7	
3 C706	2401-002009	C-AL;100UF,20%,16V,GP,TP,6.3X7	
3 L701	2701-000114	INDUCTOR-AXIAL;10UH,10%,2.5X3.	
3 L702	2701-000114	INDUCTOR-AXIAL;10UH,10%,2.5X3.	
3 L703	2701-000114	INDUCTOR-AXIAL;10UH,10%,2.5X3.	
3 L704	2701-000114	INDUCTOR-AXIAL;10UH,10%,2.5X3.	
3 L707	3301-000287	CORE-FERRITEBEAD;AA,3.5X1.0X6.	
3 L708	3301-000287	CORE-FERRITEBEAD;AA,3.5X1.0X6.	
3 00VER	AA41-00345A	PCB-SIDE A/V;CS29K1,FR-1,1L,A,1.6T,245x2	
3 JH701	3722-000143	JACK-PHONE;1P,3.4MM,-,MBAG	
3 JA701	3722-001031	JACK-RCA;3P,3.6MM,#18,AU	
3 CN704	AA39-00070A	LEAD CONNECTOR-ASSY;4P,200mm,YBNH250-04,	
3 CN701	AA39-20068E	LEAD CONNECTOR-ASSY;-,YBNH025-08,67096-0	
3 CN703	AA39-20069C	LEAD CONNECTOR-ASSY;,5P,YBNH025-05,67096	
3 BAND	AA63-10002A	BAND-TIE;-,NYLON66V2,-,-,L100,NTR,-,-	
2 L/SPK	AA65-30018A	CLAMP-WIRE;-,NYLON6.6,-,-,DATL	

ASSY COVER REAR

1 A/CREAR	AA90-04694A	ASSY COVER REAR;29K5,K57A,LATIN	
2 CB+RCA	6003-001026	SCREW-TAPTITE;RH,+,B,M4,L15,ZPC(BLK),SWR	
2 CB+CF	6003-001026	SCREW-TAPTITE;RH,+,B,M4,L15,ZPC(BLK),SWR	
2 SPCBC	AA60-00091J	SPACER-FELT;-,FELT,330X10,-,-,BLK,T0.5,-	
2 C/B	AA64-03417B	CABINET BACK;29K5,HIPS,HB,G4309	
2 AC+BC	AA65-30008A	CLAMP-CORD;-,PE,HB,BLK,-,-	
2 INB	AA64-00892G	INLAY BACK;D2,D3,RCA9P+S-VHS+DVD,PS SHEE	
2 FBT	AA65-30018A	CLAMP-WIRE;-,NYLON6.6,-,-,DATL	
2 YUGO	AA65-30018A	CLAMP-WIRE;-,NYLON6.6,-,-,DATL	
2 DRESA/V	AA65-30018A	CLAMP-WIRE;-,NYLON6.6,-,-,DATL	
2 L/RAT	AA68-02292A	LABEL-RATING;TROJAN,ART PAPER 90,60X90mm	

ASSY BOX

1 A/BOX	AA92-05174X	ASSY BOX;CL29K5MQKX/XAP	
2 L/BOX	AA68-01542A	LABEL;(UNIBOX),PAPER WHT ALLMD	
2 PCK	AA69-02178B	PACKING CASE;29K5(SAMEX),D-4 AB,A1,YEL,A	

Loc. No.	Code No.	Description ; Specification	Remark	Loc. No.	Code No.	Description ; Specification	Remark

ASSY P/MATERIAL

1	A/PMATERI	AA92-05179C	ASSY P/MATERIAL;TXN2730FX/XAA
2	BXTAPE	0203-001295	TAPE-OPP MASKING;1242,T0.06,W100,L91.4M,
2	STAPLE	AA60-40006A	PIN-STAPLE;-,-,-,H18,33X17.8X2
2	C/SET	AA69-01605A	CUSHION-SET;29K5,PS FOAMED,C=0.02
2	PE-BAG	AA69-01209A	BAG;SHEET,25-27,W54,L60,FOAM,OEM.

ASSY CPT

1	A/CPT	AA91-06401A	ASSY CPT;29K5,K57A,A68QCP891
2	D-COIL	AA27-00215A	COIL DEGAUSSING;,29INCH,10%,50T,4.5OHM,2
2	A/TBC	AA98-70011A	ASSY-TBC,WIRE(P);-,29,NTSC,PAL,2P
⚠ 2	CRT	AA03-00273A	CRT COLOR;A68QCP891X100 ,380MG,1.11MH,14
2	C/CORE	AA65-00019A	CLAMP CORE-D,COIL;25-34,NYLON 66,V2,NTR
2	S/GUM	AA63-60004L	SPACER-GUM,CRT;-,NTR RUBBER,-,-,-,BLK,T3
2	INL/CRT	AA64-03072A	INLAY-COVER;PS-SHEET,50X30,T.1.0

ASSY ACCESSORY

1	A/ACCS	AA92-07703E	ASSY ACCESSORY;CL29K5MQKX/XAP,K57A
2	AC-TAPE	0203-001279	TAPE-OPP MASKING;#232,T0.14,W15,L50000,Y
2	RMT	AA59-00302F	REMOCON;,TM58,SSM174PT,41,SS,L/GRAY,MBR,
2	I/B	AA68-02838A	MANUAL USERS;K57A,SPA,W/P100(G)
2	I/B2	AA68-02839A	MANUAL USERS;K57A,ENG,W/P100(G)
2	C/WARR	AA68-00987A	CARD WARRANTY;W/P100,A4,1P,SELA
2	BAG	AA69-01195A	BAG PE;CL29A6W8X,HDPET0.012,93/4X151
2	BATT	4301-000120	BATTERY-MN;1.5V,-,AA
2	C/RCA	AA39-40001B	PATCH-CORD;3P-3P1500MMRED,WHT,YEL,500
2	PLUG	3721-000136	PLUG-CONVERSION;15A300VPI4.0CP

8. Block Diagram

8-1 K57A

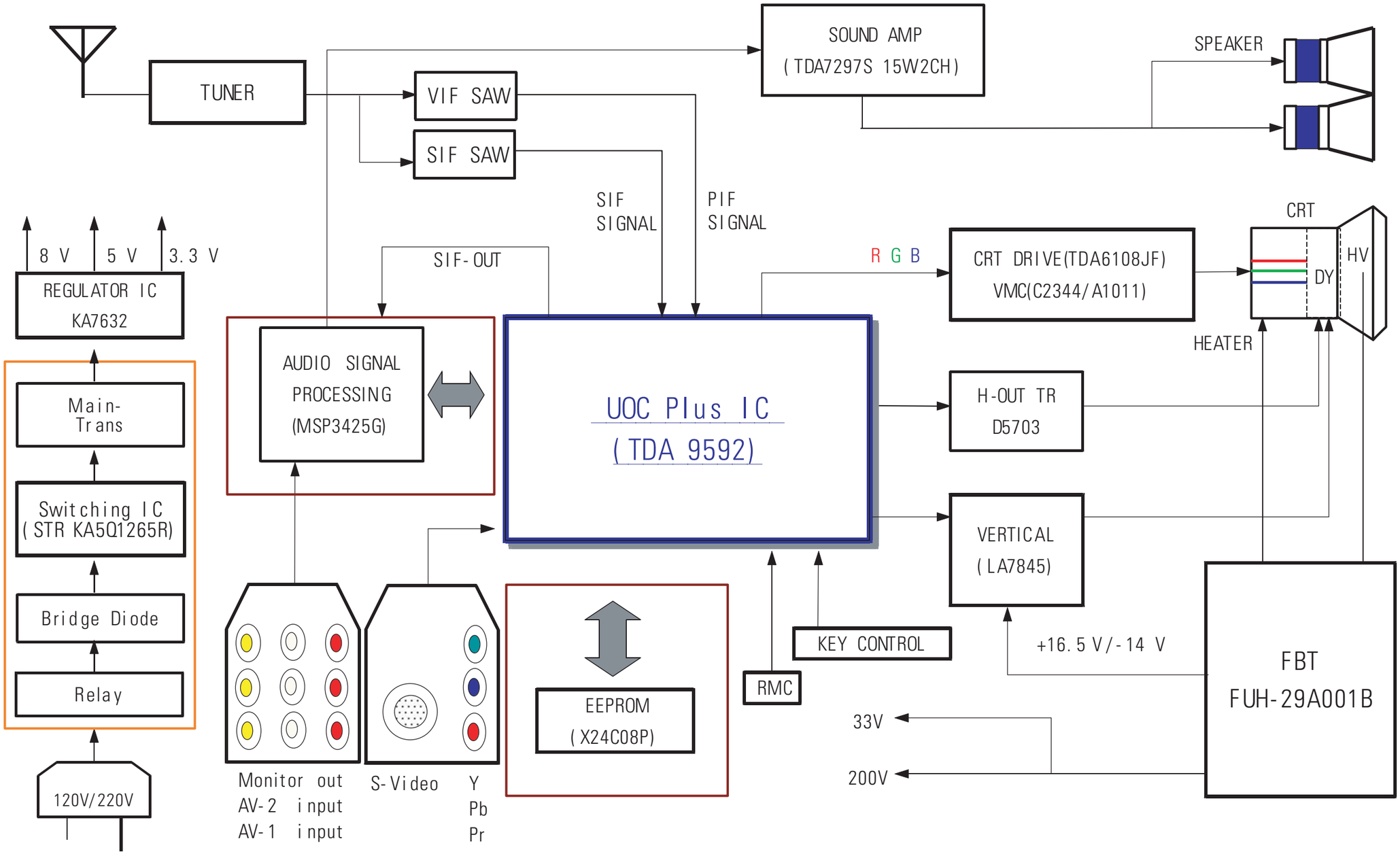

9. Wiring Diagram

9-1 K57A

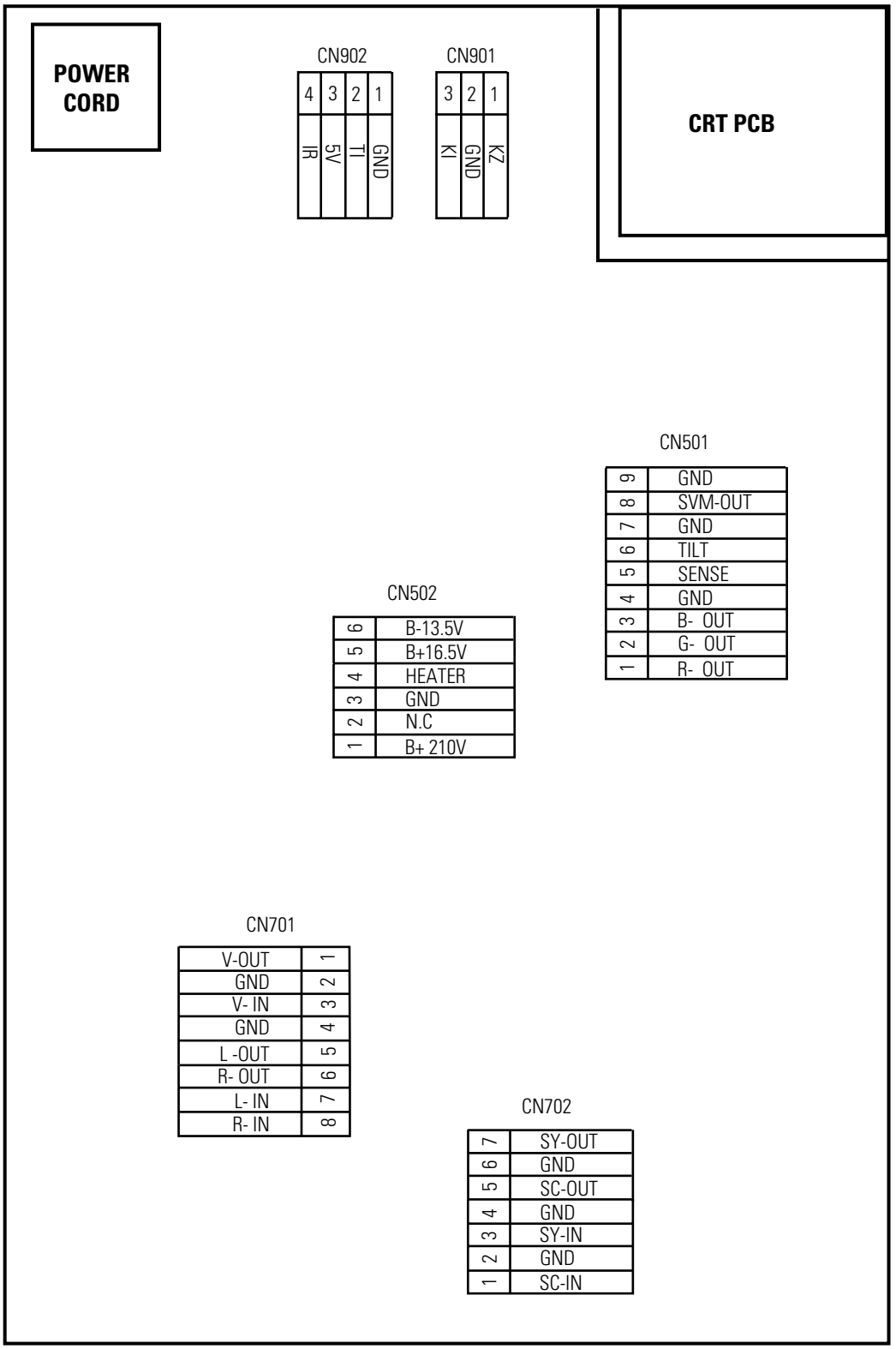

MEMO

10. Schematic Diagrams

10-1 MAIN(1/3)

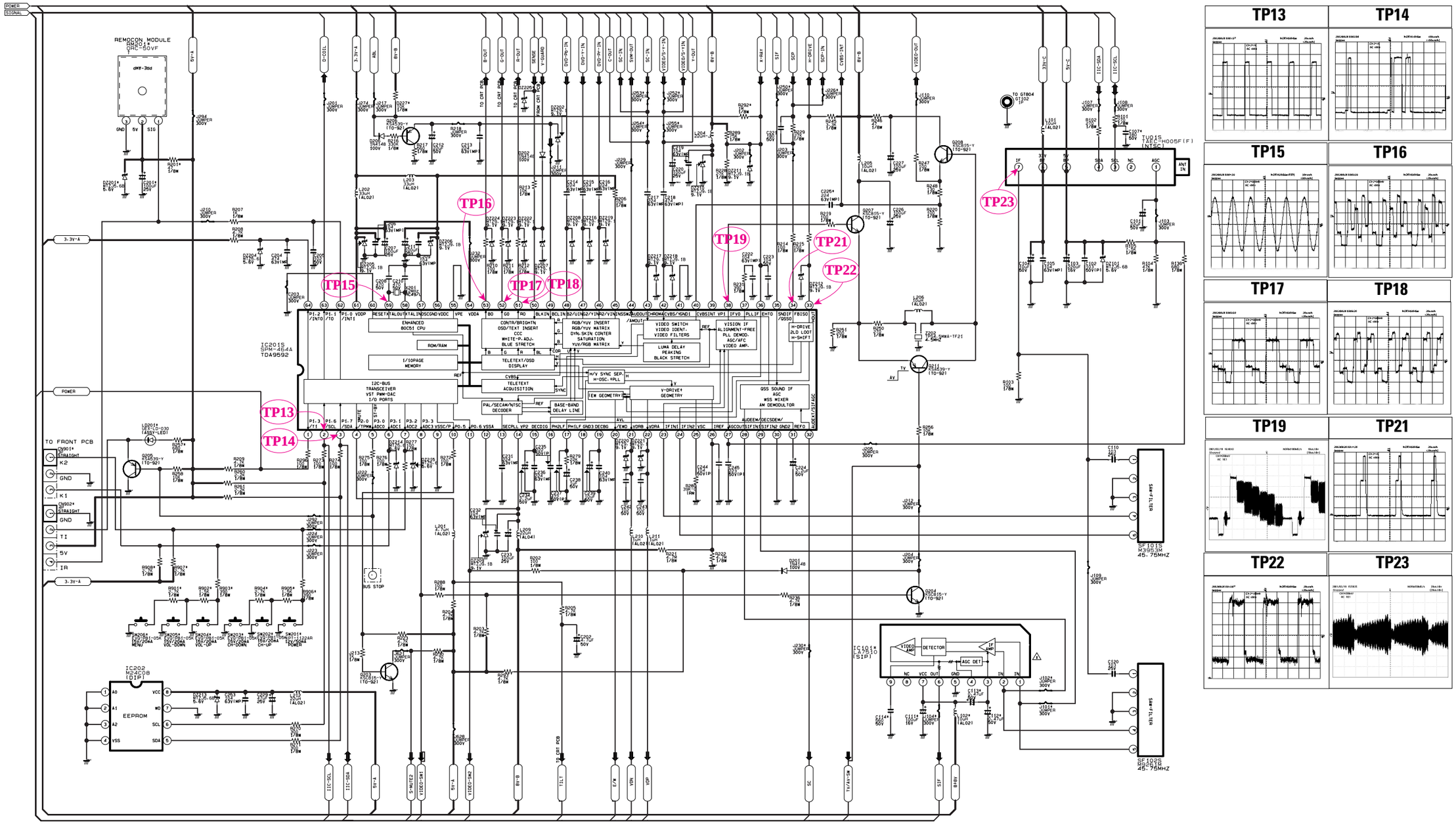

10-2 MAIN(2/3)

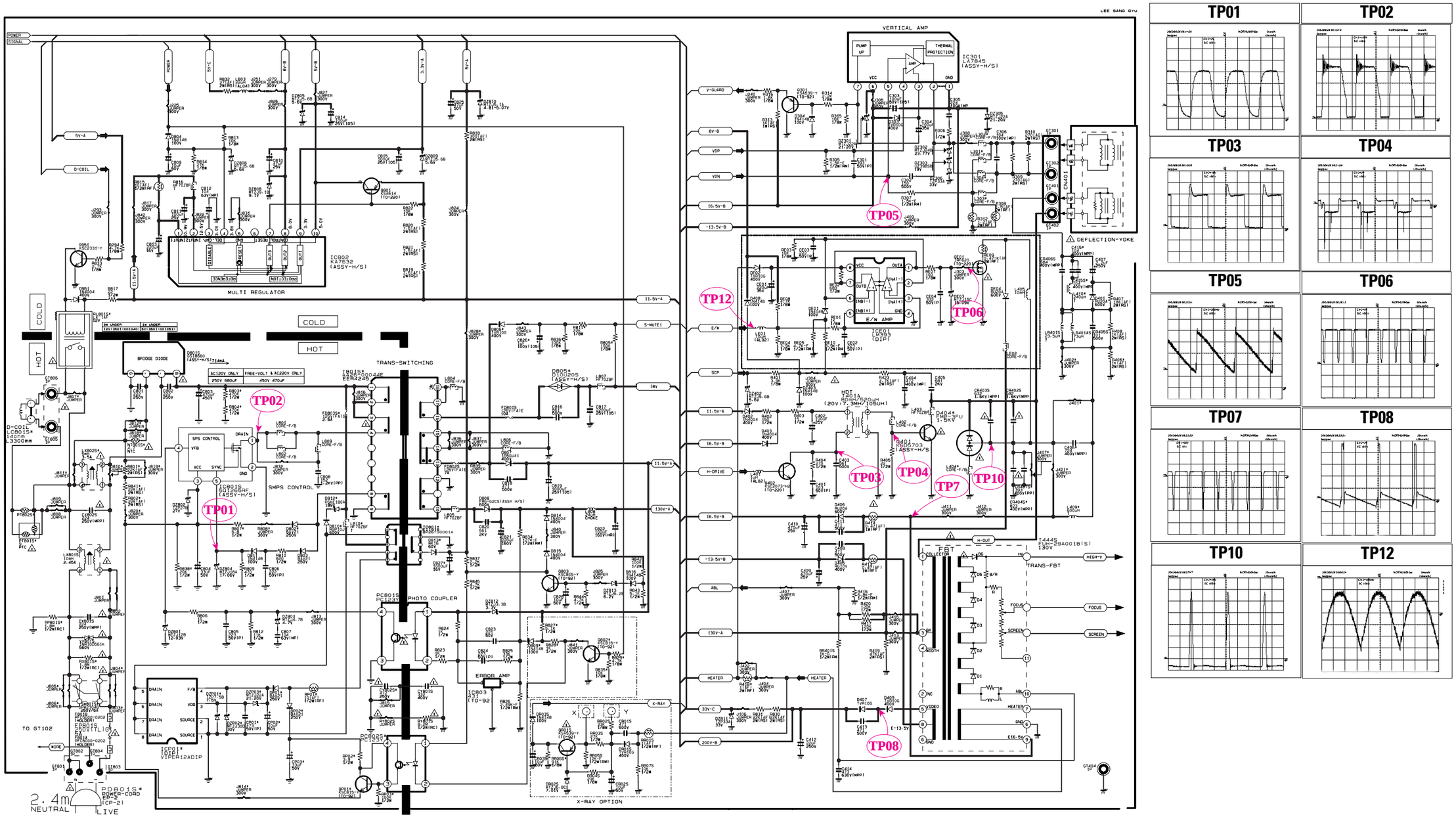
TP01
TP02
TP03
TP04
TP05
TP06
TP07
TP08
TP10
TP12
VERTICAL AMP
MULTI REGULATOR
TRANS-SWITCHING
SMPS CONTROL
PHOTO COUPLER
ERROR AMP
X-RAY OPTION
DEFLECTION-YOKE
TRANS-FBT
COLD
HOT
NEUTRAL
LIVE

10-3 MAIN(3/3)

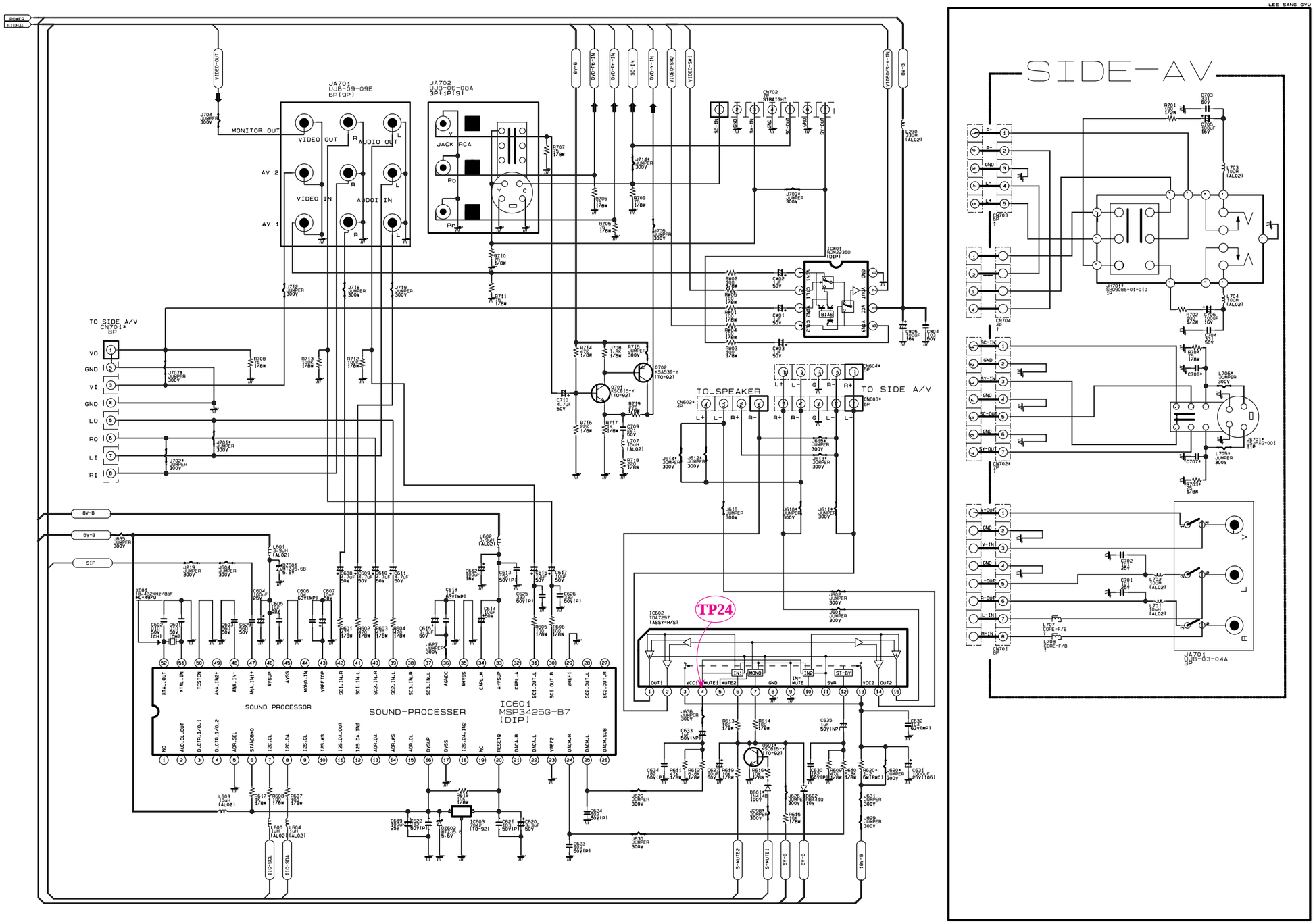
SIDE-AV
TP24
SOUND PROCESSOR
SOUND-PROCESSER
IC601
MSP3425G-B7
(DIP)
TO SIDE A/V
TO SPEAKER
MONITOR OUT
VIDEO OUT
AUDIO OUT
VIDEO IN
AUDIO IN
JACK RCA

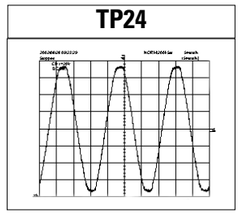
TP24

10-4 CRT

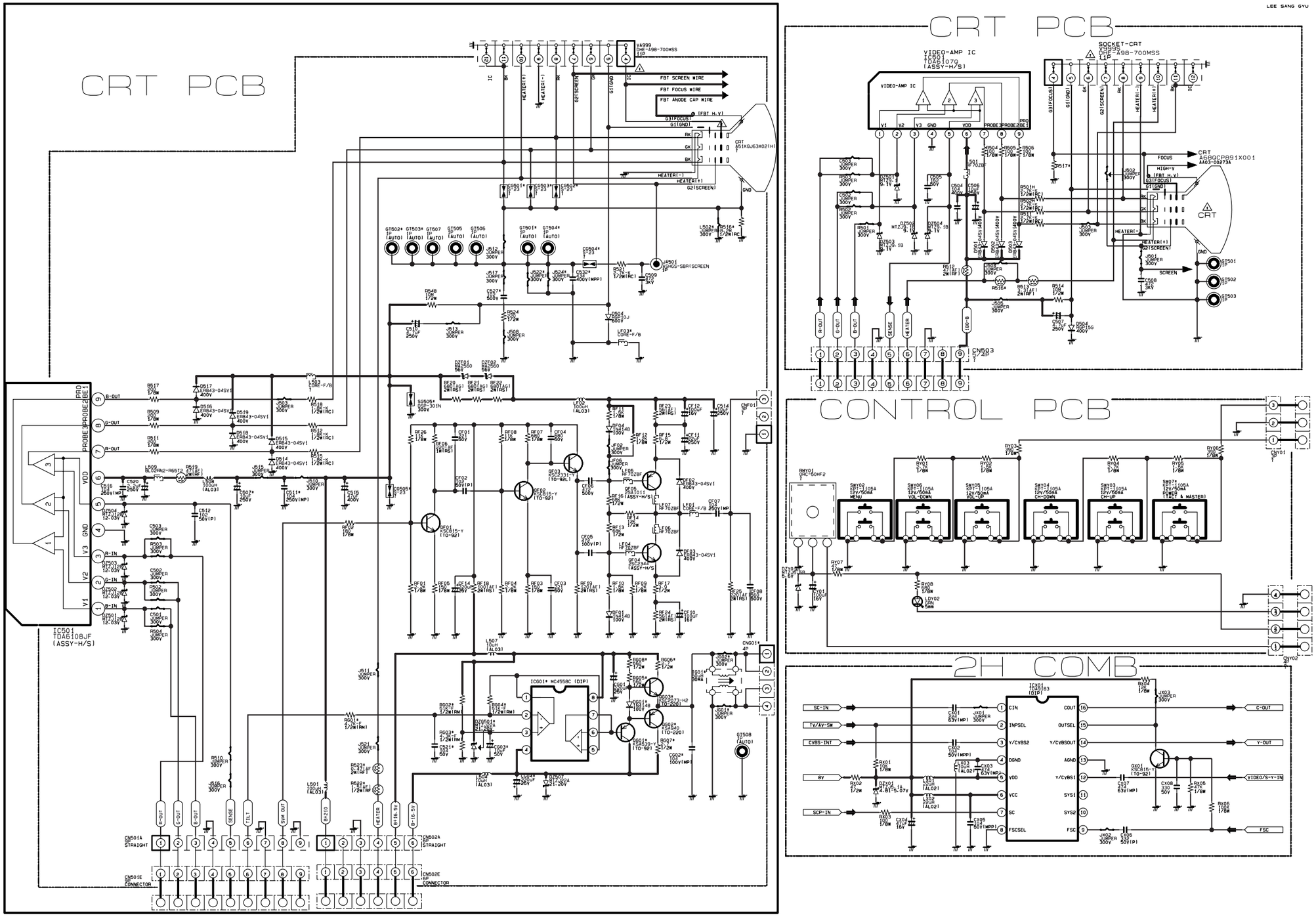
CRT PCB
CRT PCB
CONTROL PCB
2H COMB
LEE SANG GYU
FBT SCREEN WIRE
FBT FOCUS WIRE
FBT ANODE CAP WIRE
VIDEO-AMP IC
IC501
TDA6108JF
(ASSY-H/S)
IC501* MC4558C (DIP)
CN501A
STRAIGHT
CN502A
STRAIGHT
CN501E
CONNECTOR
CN502E
CONNECTOR
CN503
CRT
FOCUS
HIGH-V
SCREEN
SC-IN
TV/AV-SW
CVBS-INT
BV
SCP-IN
C-OUT
Y-OUT
VIDEO/S-Y-IN
FSC